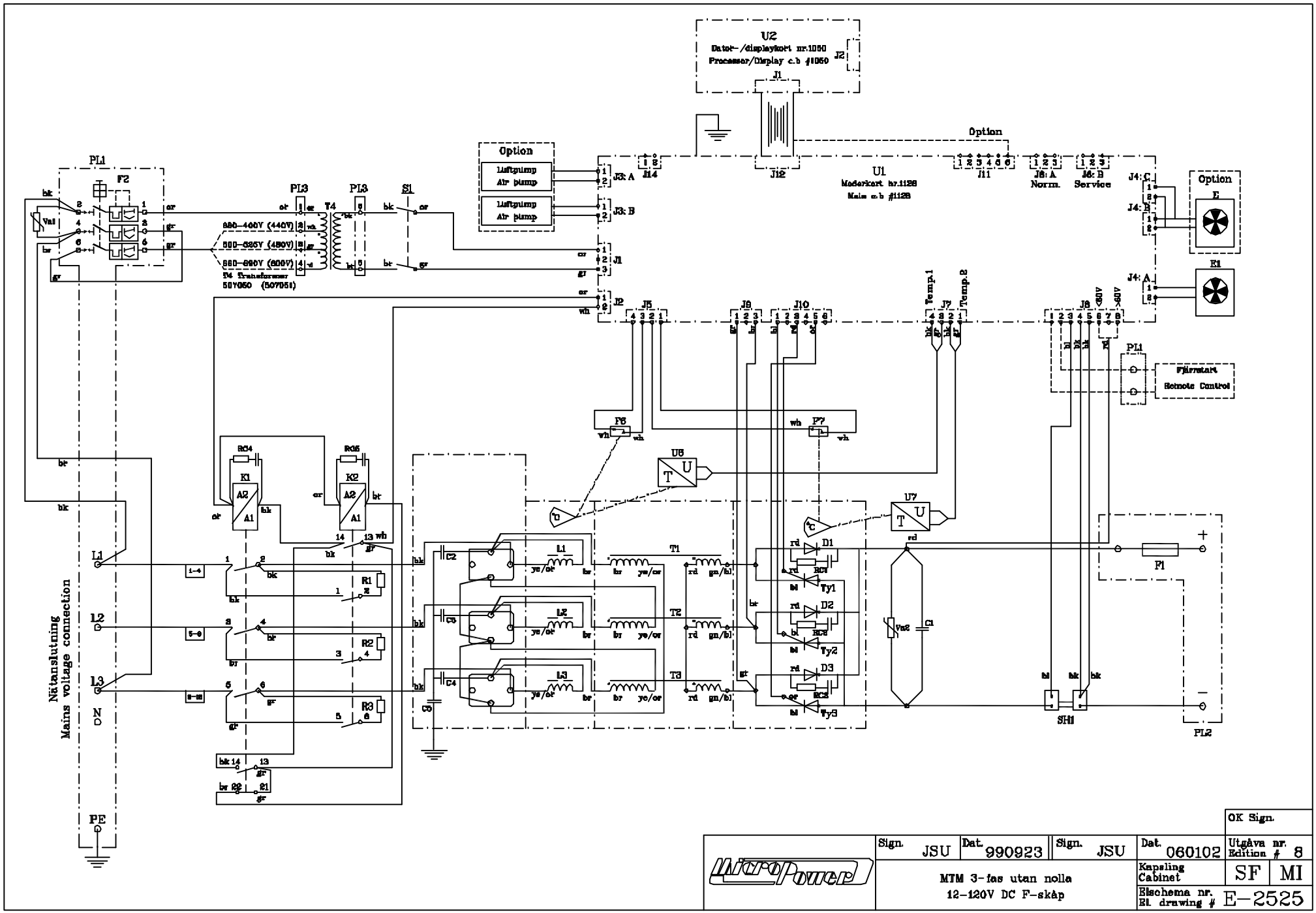

	Sign. JSU	Dat. 990923	Sign. JSU	Dat. 060102	OK Sign.
					Utgåva nr. Edition # 8
MTM 3-fas utan nolla 12–120V DC F-skåp				Kapsling Cabinet	SF MI
				Elschema nr. El. drawing #	E–2525