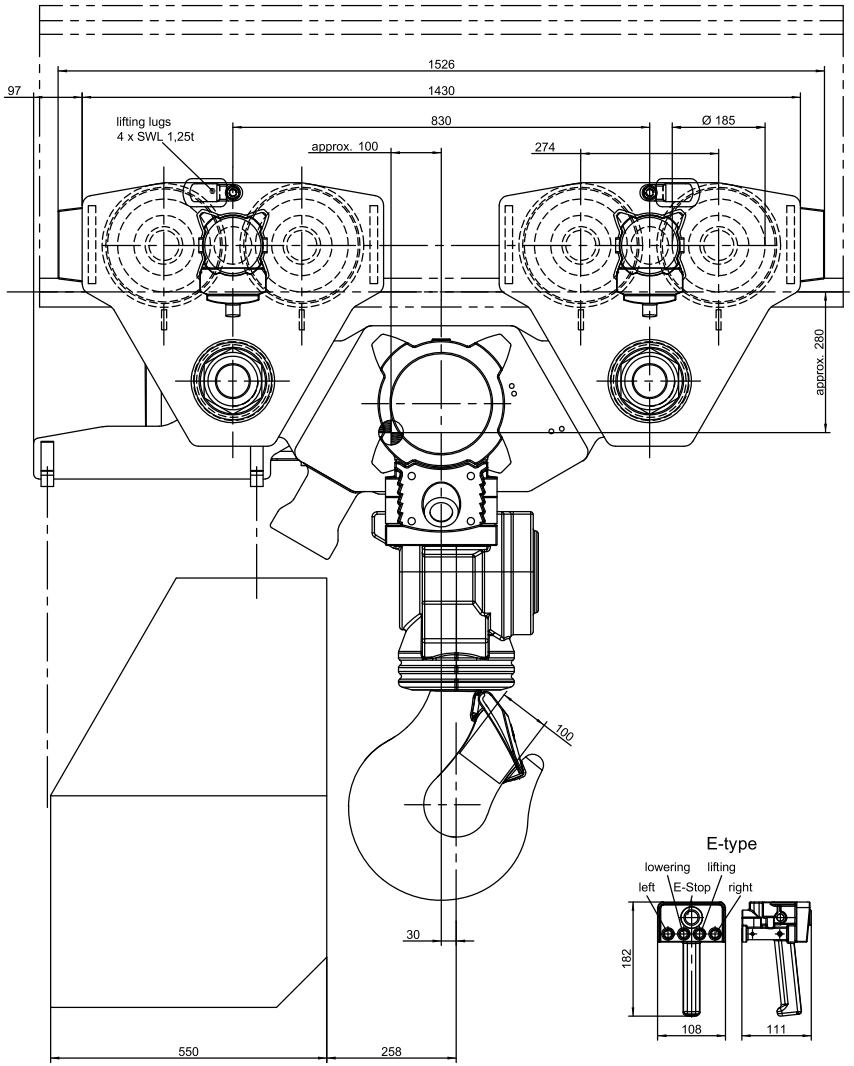





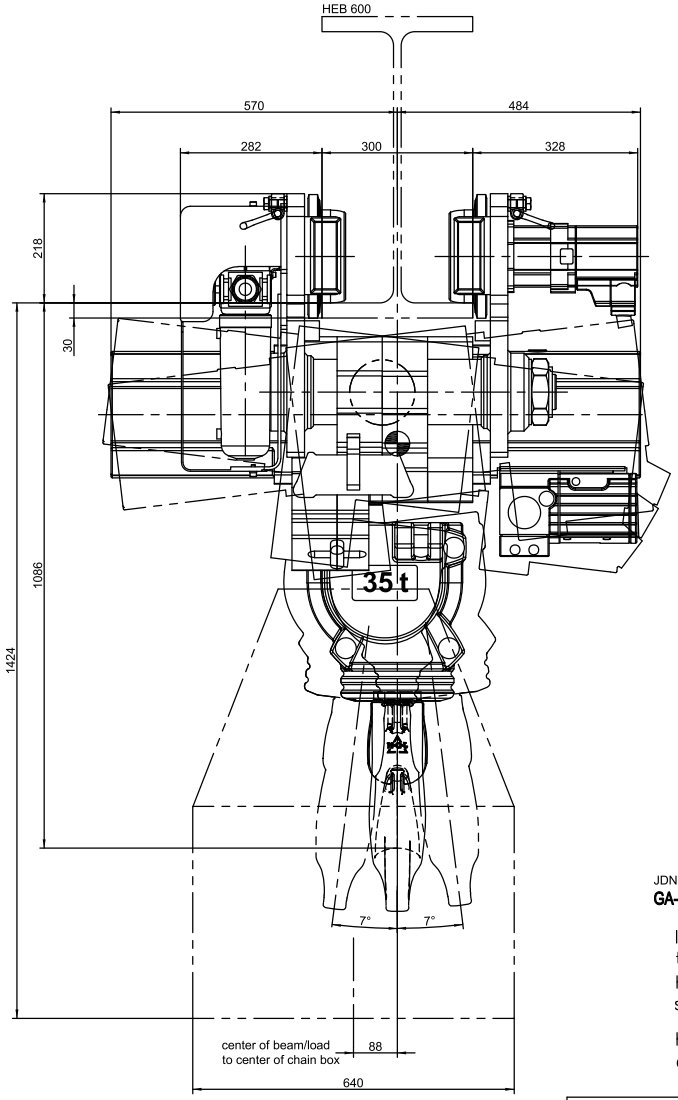


JDN filename:
**GA-VA069116-b- EH 37 NM6BI KKI b300 WE RB KRV**

| | |
|---|---|
| lifting capacity: | 35t |
| total weight approx.: | 1800kg |
| hoist type: | EH 37 |
| serial-#: | 8400855 |
| height of lift: | 7m |
| control length: | 7m |

| For Project use only: Status Code | | | |
|---|---|---|---|
| 1 | 2 | 3 | 4 |

| | | |
|---|---|---|
| Date 07-04-2025 | Sign. Sachin Gavhane | Digitally signed by: Sachin Gavhane DN: CN = Sachin Gavhane email = sachin.gavhane@akersolutions Origin C = NO O = AKSO OU = EMM Date: 2025.05.19 19:54:31 +02'00' |
| Installation: | Project WBS: M.O085C.22.A.0012 | |
| Supplier doc. No: 2423341-R-XD001 | | |
| Tag No.(s): 73-MB825 | | |
| Area Code: C87 | System Code: 73 | |
| Equinor document number: AS-2006-J-LA-001 | | Rev: 02 |

PROJECT: TROLL A REVAMP

| REVISION | DATE | REASON FOR ISSUE | DRAWN | CHECKED | DISC. CHECK | APPROV |
|---|---|---|---|---|---|---|
| 01 | 10.01.2025 | Issued for project acceptance | | | | |
| 02 | 28.04.2025 | Re-issued for project acceptance | | | | |

| rev. | date | by | checked | remark |
|---|---|---|---|---|
| d | | | | |
| c | | | | |
| b | 28.04.2025 | wk | ko | customer comments and templates included |
| a | 09.04.2025 | wk | ko | lifting lugs, COG, weight |

date : 10.01.2025 | drawn : Wilke | checked : Koch | scale: 1:5

J.D. NEUHAUS

document type : general arrangement drawing

title : General Arrangement Drawing 73-MB825

A1