EL. MOTOR			
TAG NO.:	M. PUSNES ART. NO.	RIGHT/LEFT	AREA
EM-05-0100	010P40.00160	LEFT	D30
EM-05-0200	010P40.00160	LEFT	P30
EM-05-0300	010P40.00161	RIGHT	P30
EM-05-0400	010P40.00161	RIGHT	C30

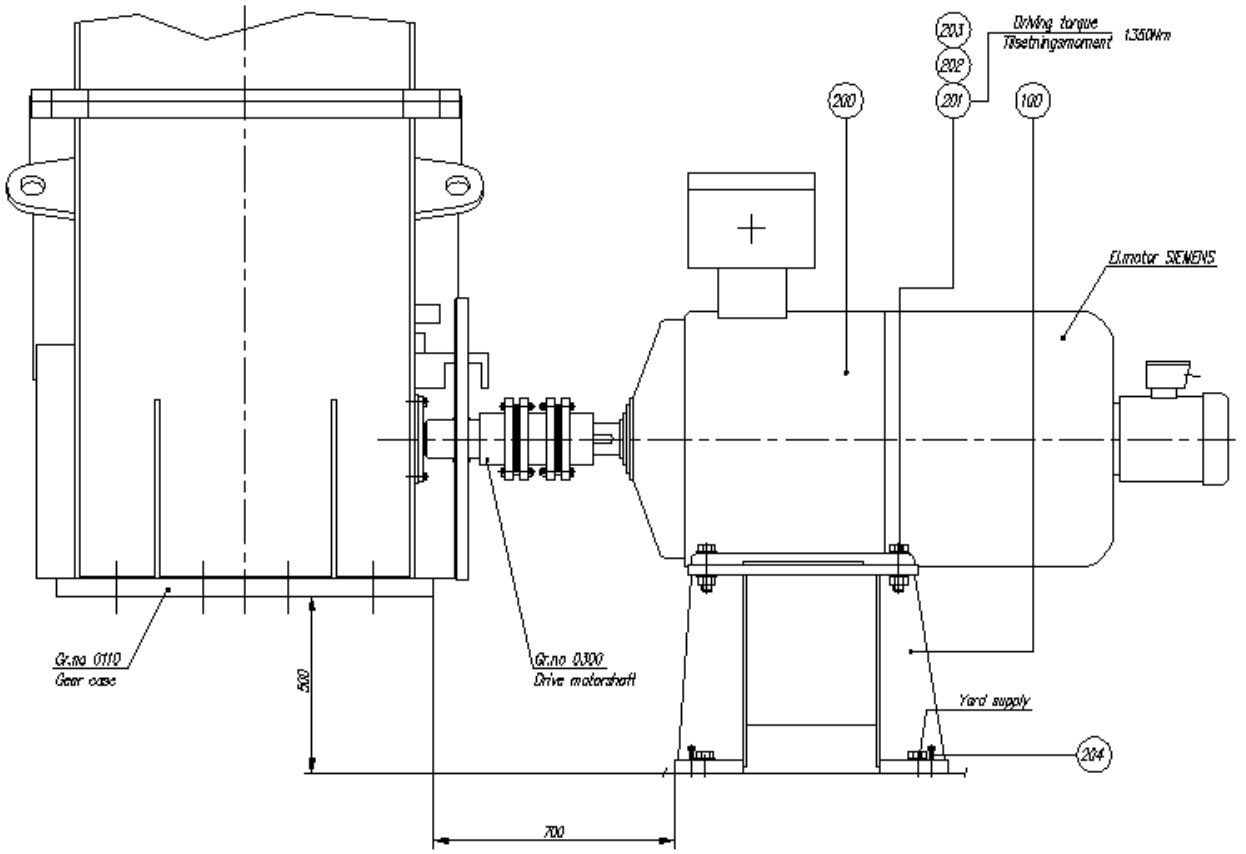

Note:
For Footprint/Foundation
Ref. G.A. Windlass dwg.no.: 109663

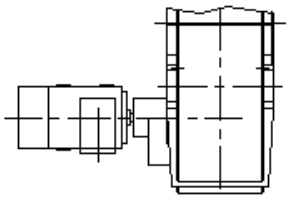

291876.10200
El. motor Left/El. motor Venstre

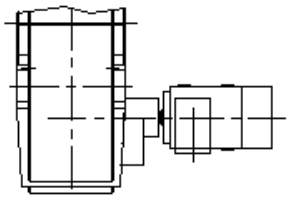

291876.10100
El. motor Right/El. motor Høyre
Drawn/Tegnet

Rev./Status	Date	Description	Made by	Des. check	Dim. appr.	Contr. appr.	Comp. appr.
02L	18.06.97	AS BUILT	ED				
01	08.01.97	FOR REVIEW	TSV	JBS	VIS		

umoe VISUND

HYDRO

P.O. No. 20200

Package Title: WINDLASS AND FAIRLEAD

Description / Tag No's: GROUP DRAWING, EL.MOTOR FRAME

Suppl. Drawing No: 291876 — Size: A2 — System: 05

Info Type: 60 — Scale: 1:10 — Area: underhw

Proj. Drawing No: 21-1A - HM - 09200 - S60 - 0053 — Rev.: 02L — Sheet: 01

Complex/ Subcomplex	Originator	Disc./ Info Type	Package No.	Sub Seq. No.	Rev.	Sheet

ACCEPTANCE CODES
1 – Accepted
2A – Provisional acc. Interface info frozen. Revise and resubmit.
2 – Acc. with comm. incorp. Revise and resubmit.
3 – Not acc. Revise and resubmit.
4 – For info only.

REVIEWER'S PRINTED NAME

REVIEWER'S SIGN & DATE

Pos.	No. per unit	Art. No.	Description	Material	Dimension	kg/each

References: Project Doc. No.: 21-1A-HM-S53-09200-0037, Rev. 01L

Surface roughness: ISO 1302 Ra (µm)

Tolerances where not specified: Machining: DIN 7168 MITTEL; Welding: DIN 8570 ca 1 / 5; Casting: DIN 1683 nr 1625

Nondestructive examination if specified: Ultrasonic; Magnetic Particle; Radiographic

Scale: 1:10

Weight: 2368 kg

This is a computer aided drawing and must not be altered manually

Symbol	Field	Alteration	Date/Sign.
–		Acc. to as built	18.06.97 ED

Date: 06.01.97 — Designed: TSV — Traced by: — Checked: KBH — Stand. sheet: JBS — Approved: VIS

EL. MOTOR FRAME
EL. MOTOR FUNDAMENT

Type: 3150 ED — Group: 0170 — Pattern No.:

PUSNES

This drawing remains our exclusive property. Should not be copied, reproduced and/or made available to third parties without our written consent.

DWG./ART.No.: 110 291876 . 10100

Replacement for: — Replaced by: