D3-110I-A, D3-130A-A, D3-130I-A, D3-160A-A, D3-160I-A

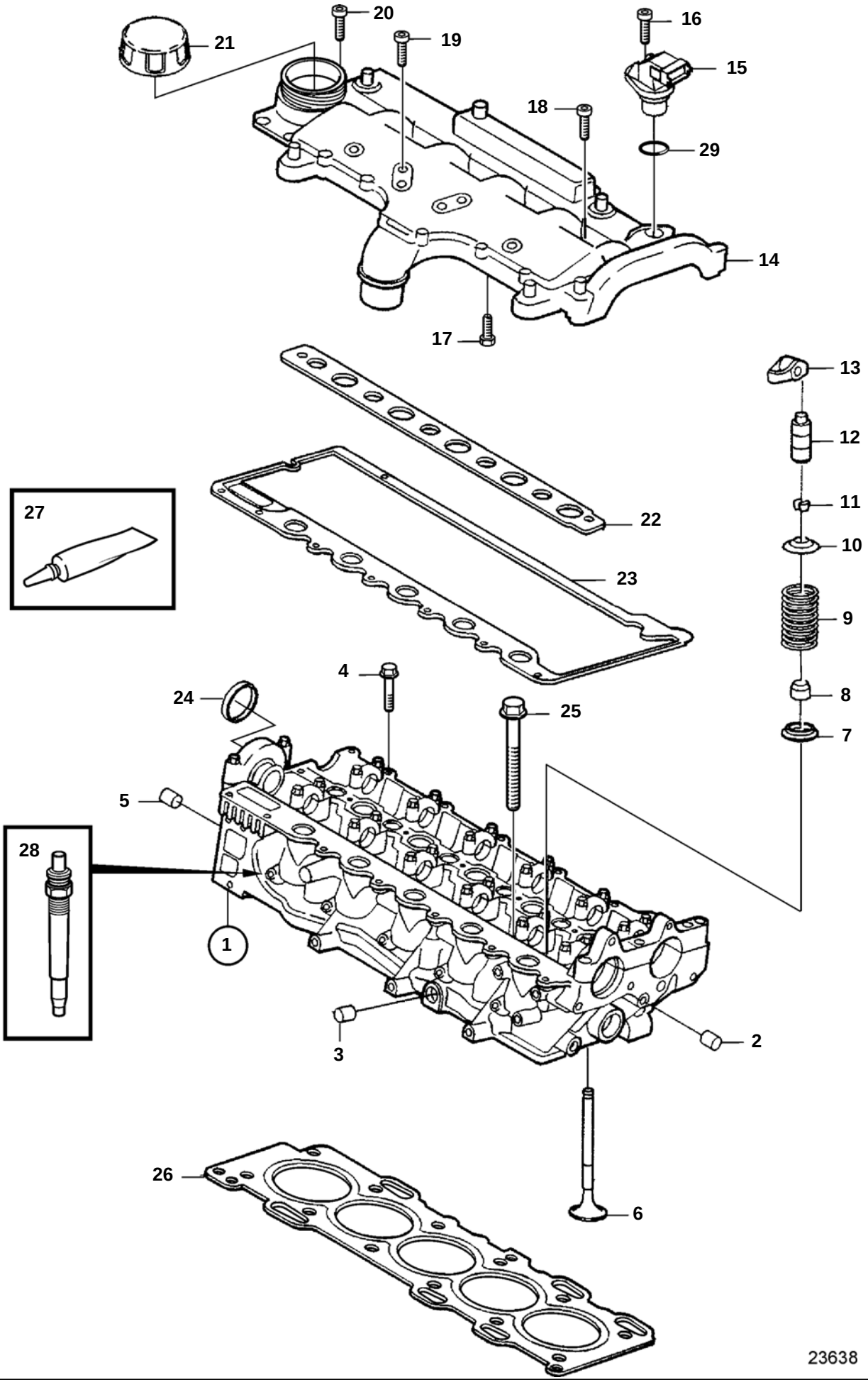

D3-110I-A, D3-130A-A, D3-130I-A, D3-160A-A, D3-160I-A

REF	PART NO.	QTY	DESCRIPTION	NOTES
1	3803856	1	Cylinder head, exch	(3803647)
2	946780	1	· Cap plug	
3	946779	2	· Cap plug	
4	965212	24	· Screw	
5	981713	3	· Plug	
6	8631650	10	· Inlet valve, intake	
	8631651	10	· Exhaust valve, exhaust	
7	8631655	20	· Valve spring washer	
8	8631652	20	· Valve seal	
9	8631656	20	· Valve spring	
10	8631654	20	· Valve spring washer	
11	9454613	40	· Valve collet	
12	8670047	20	Lifter	
13	8670045	20	Lifter	
14	8692397	1	Valve cover	
15	8631533	1	Sender	
16	969422	1	Screw	
17	982483	3	6 point socket screw	
18	982484	19	6 point socket screw	
19	982486	4	6 point socket screw	
20		11	Flange screw	
21	1275403	1	Oil filler cap	
22	8642665	1	Gasket	
23	8692438	1	Gasket	
24	8631561	1	Sealing ring	
25	9497825	12	Screw	
26	30731261	1	Cyl.head.gasket	Gasket with 1 hole., Class A, (30650521)
	30731262	1	Cyl.head.gasket	Class B, (30650522), Gasket with 2 hole.
	30650523	1	Cyl.head.gasket	Class C, Gasket with 3 hole.
	30650524	1	Cyl.head.gasket	Gasket with 4 hole., Class D
	30650525	1	Cyl.head.gasket	Gasket with 5 hole., Class E
27	1161059	1	Sealant	
28	8631607	1	Glow plug	
29	30756062	1	O-ring	

D3-110I-B, D3-110I-C, D3-130A-B, D3-130I-B, D3-130A-C, D3-130I-C, D3-160A-B, D3-160I-B, D3-160A-C, D3-160I-C, D3-190A-B, D3-190I-B, D3-190A-C, D3-190I-C

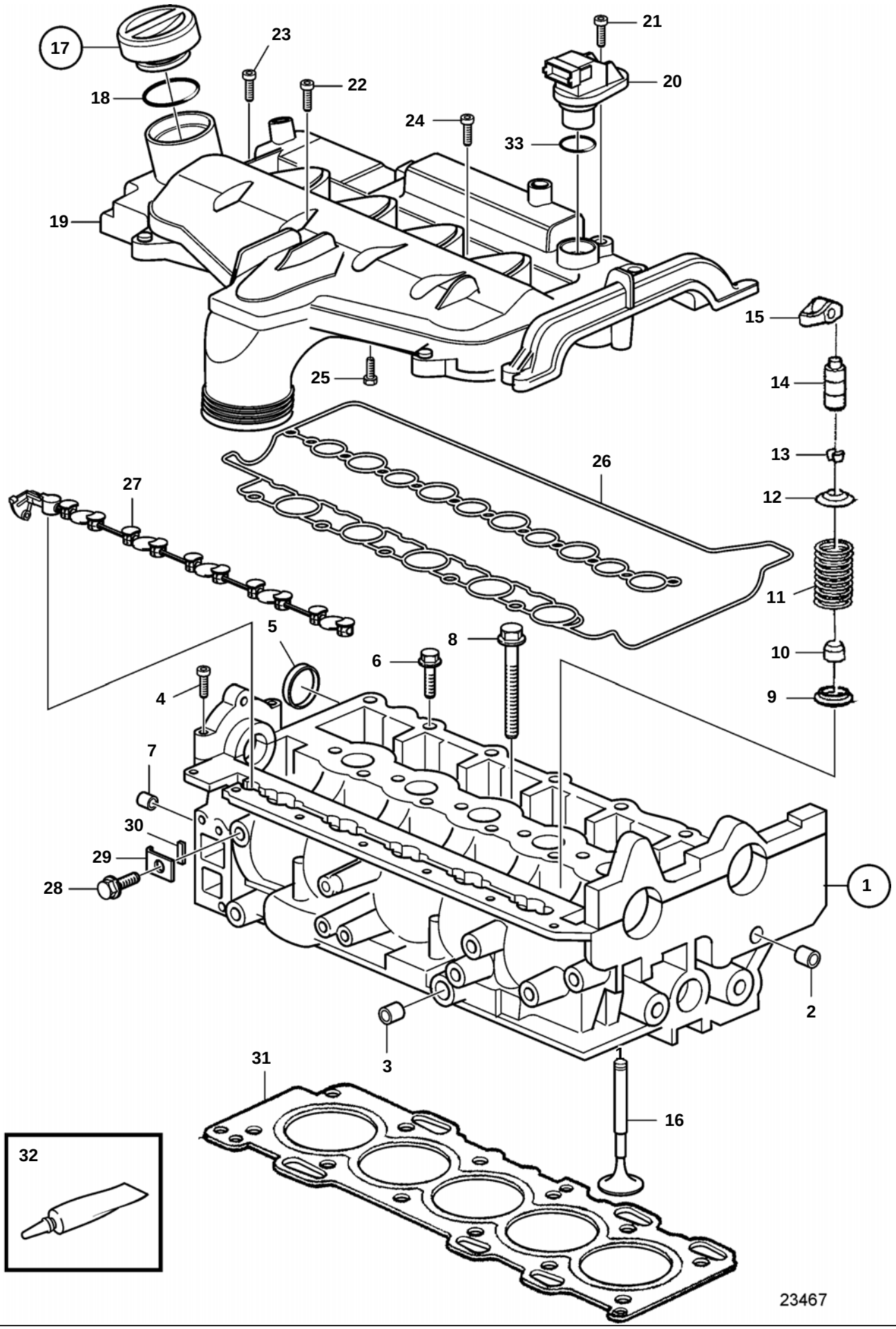

D3-110I-B, D3-110I-C, D3-130A-B, D3-130I-B, D3-130A-C, D3-130I-C, D3-160A-B, D3-160I-B, D3-160A-C, D3-160I-C, D3-190A-B, D3-190I-B, D3-190A-C, D3-190I-C

REF	PART NO.	QTY	DESCRIPTION	NOTES
1	3803986	1	Cylinder head, exch	
2	946780	1	· Cap plug	
3	946779	2	· Cap plug	
4	986322	5	· Screw	
5	8631561	1	· Sealing ring	
6	965212	24	· Screw	
7	981713	3	· Plug	
8	9497825	12	· Screw	
9	8631655	20	· Valve spring washer	
10	8631652	20	· Valve seal	
11	8631656	20	· Valve spring	
12	8631654	20	· Valve spring washer	
13	9454613	40	· Valve collet	
14	8670047	20	· Lifter	
15	8670045	20	· Lifter	
16	8631650	10	· Inlet valve, intake	
	8631651	10	· Exhaust valve, exhaust	
17	3819129	1	Oil filler cap	
18	30677740	1	· O-ring	
19	30743258	1	Cover	
20	8658726	1	Sender	
21	946544	1	Flange screw	
22	982486	4	6 point socket screw, intake	
23	987349	12	Screw	
24	982484	19	6 point socket screw	
25	982483	3	6 point socket screw	
26	30713459	1	Gasket	
27	30677602	1	Shutter	
28	977814	1	Screw	
29	3840206	1	Bracket	
30	3884720	1	Rubber guard	
31	30731261	1	Cyl.head.gasket	Gasket with 1 hole., Class A
	30731262	1	Cyl.head.gasket	Class B, Gasket with 2 hole.
	30731263	1	Cyl.head.gasket	Gasket with 3 hole., Class C
	30731264	1	Cyl.head.gasket	Gasket with 4 hole., Class D
	30731265	1	Cyl.head.gasket	Gasket with 5 hole., Class E
32	1161059	1	Sealant	
33	30756062	1	O-ring	

D3-110I-A, D3-130A-A, D3-130I-A, D3-160A-A, D3-160I-A

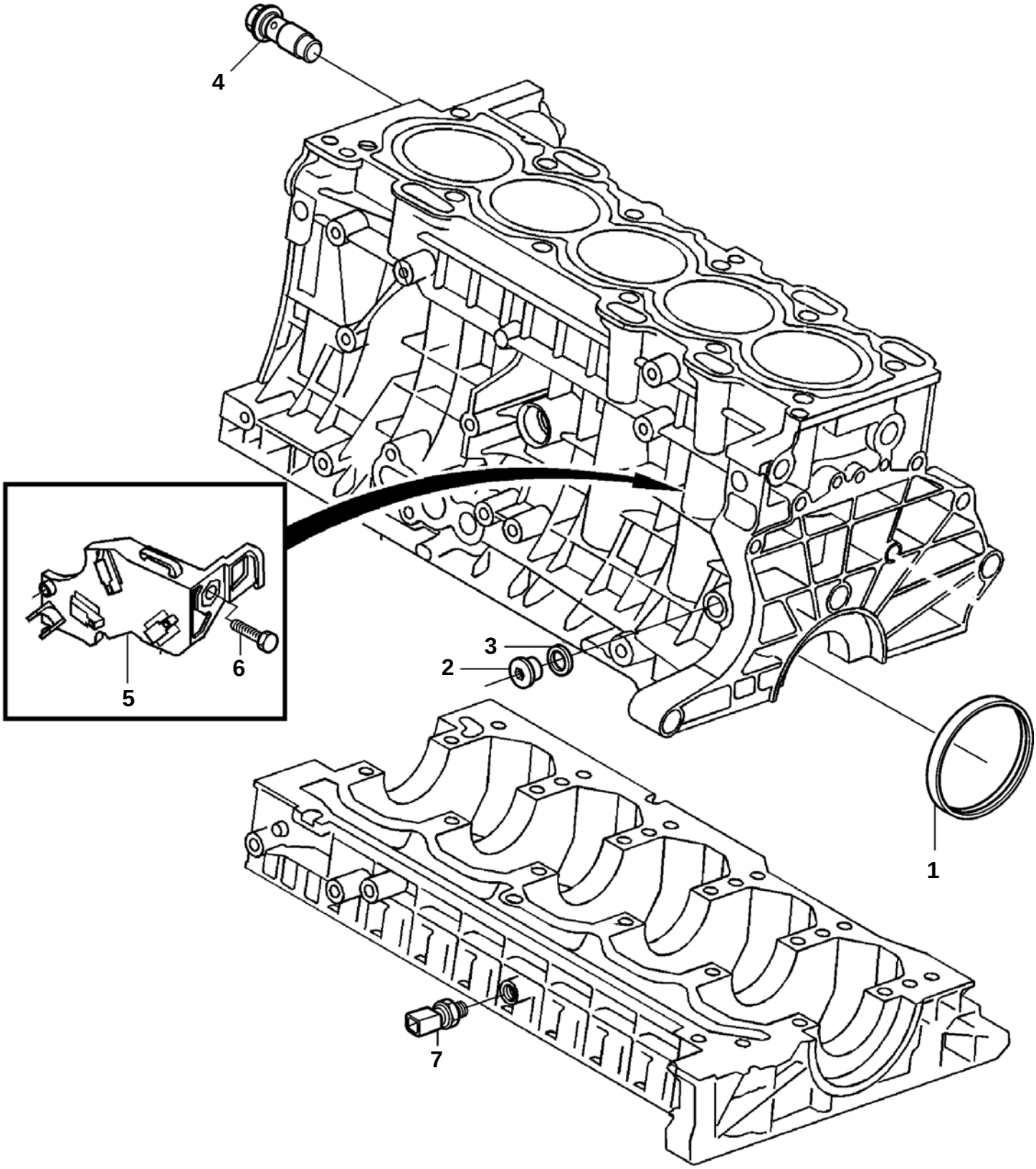

19716

D3-110I-A, D3-130A-A, D3-130I-A, D3-160A-A, D3-160I-A

REF	PART NO.	QTY	DESCRIPTION
1	9458178	1	Sealing ring
2	8642542	1	Plug
3	11996	1	Gasket
4	8642166	1	Valve
5	8627161	1	Bracket
6	946752	1	Flange screw
7	3545696	1	Oil pressure sensor

D3-110I-B, D3-110I-C, D3-130A-B, D3-130I-B, D3-130A-C, D3-130I-C, D3-160A-B, D3-160I-B, D3-160A-C, D3-160I-C, D3-190A-B, D3-190I-B, D3-190A-C, D3-190I-C

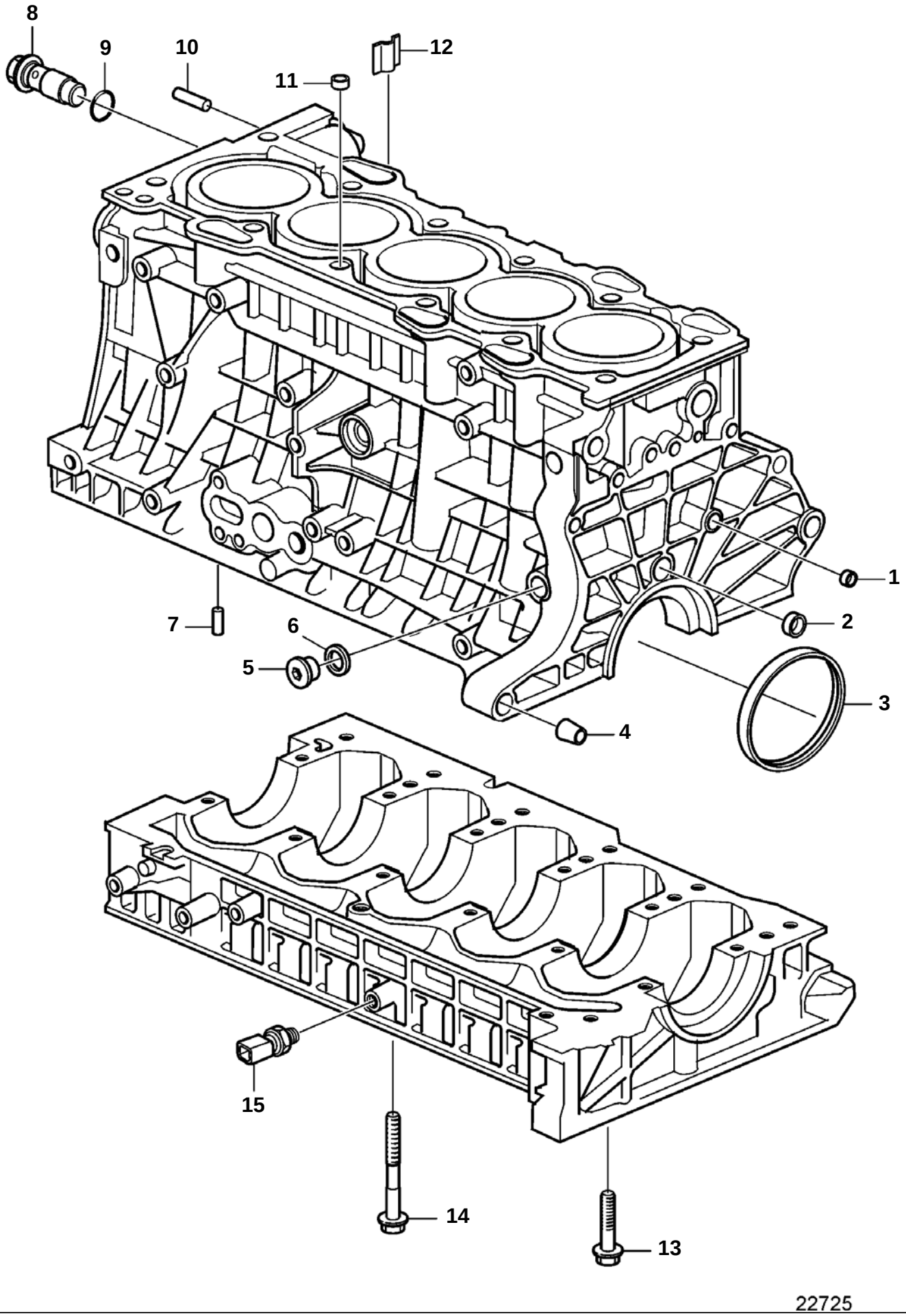

D3-110I-B, D3-110I-C, D3-130A-B, D3-130I-B, D3-130A-C, D3-130I-C, D3-160A-B, D3-160I-B, D3-160A-C, D3-160I-C, D3-190A-B, D3-190I-B, D3-190A-C, D3-190I-C

REF	PART NO.	QTY	DESCRIPTION	NOTES
1	981713	1	Plug	
2	8687868	1	Plug	(9687868)
3	9458178	1	Sealing ring	
4	1256394	2	Guide sleeve	
5	30713237	1	Plug	
6	11996	1	Gasket	
7	1383730	5	Locating pin	
8	30677893	1	Piston cooling valve	SN-350113
	30750943	1	Piston cooling valve	SN350114-
9	11998	1	Gasket	
10	950542	2	Pin	
11	1366129	2	Guide sleeve	
12	8631501	1	Guide rail	
13	973905	5	Flange screw	
14	8631499	12	Flange screw	
15	3545696	1	Oil pressure sensor	

D3-110I-A, D3-110I-B, D3-110I-C, D3-130I-A, D3-130I-B, D3-130I-C, D3-160I-A, D3-160I-B, D3-160I-C, D3-190I-B, D3-190I-C

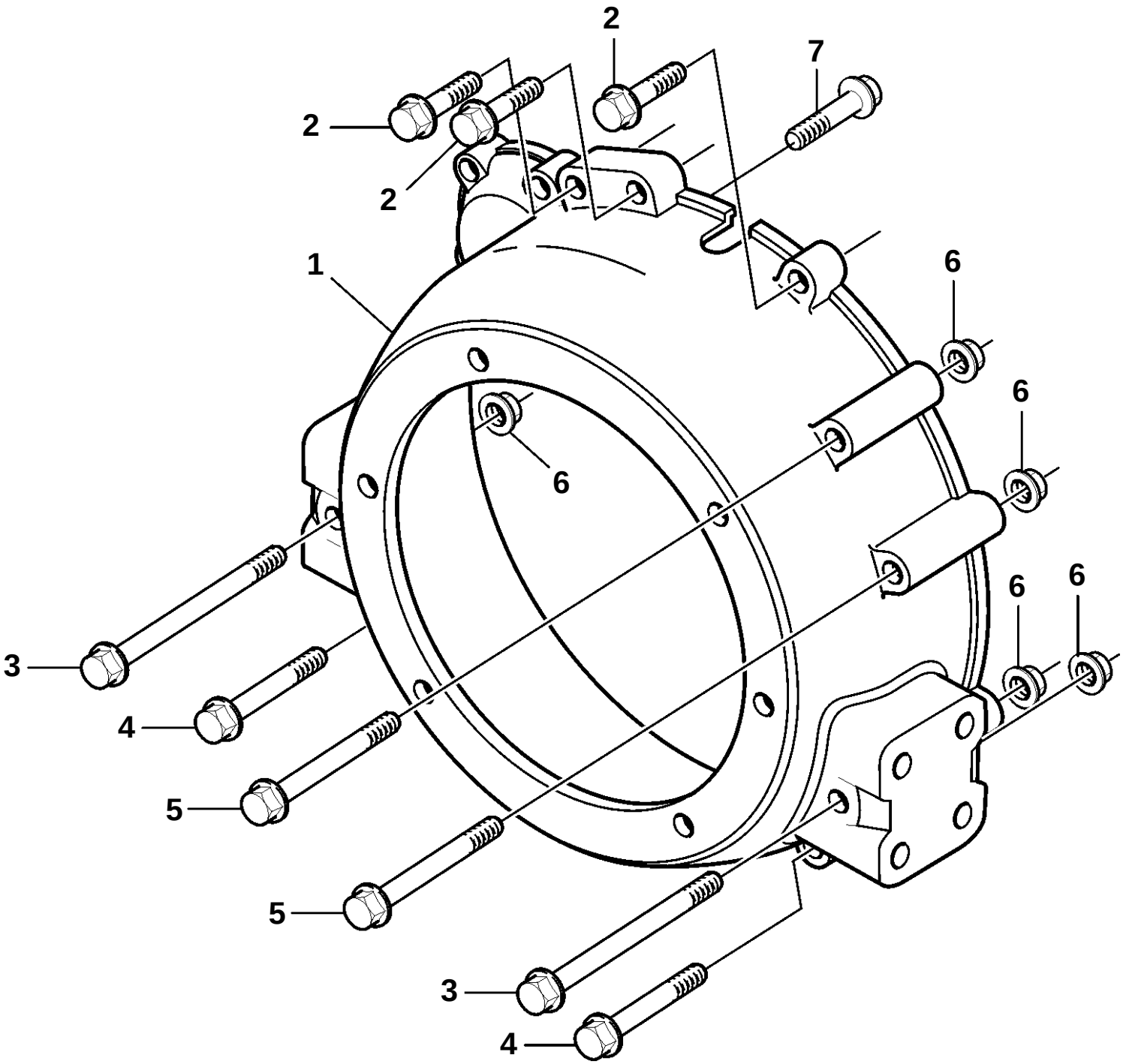

20424

D3-110I-A, D3-110I-B, D3-110I-C, D3-130I-A, D3-130I-B, D3-130I-C, D3-160I-A, D3-160I-B, D3-160I-C, D3-190I-B, D3-190I-C

REF	PART NO.	QTY	DESCRIPTION	NOTES
1	3819096	1	Flywheel housing	
2	965185	3	Flange screw	L=40mm
3	973098	2	Flange screw	L=150mm
4	965189	2	Flange screw	L=90mm
5	969313	2	Flange screw	L=110mm
6	971095	5	Nut	
7	965188	1	Screw	

D3-130A-A, D3-130A-B, D3-130A-C, D3-160A-A, D3-160A-B, D3-160A-C, D3-190A-B, D3-190A-C

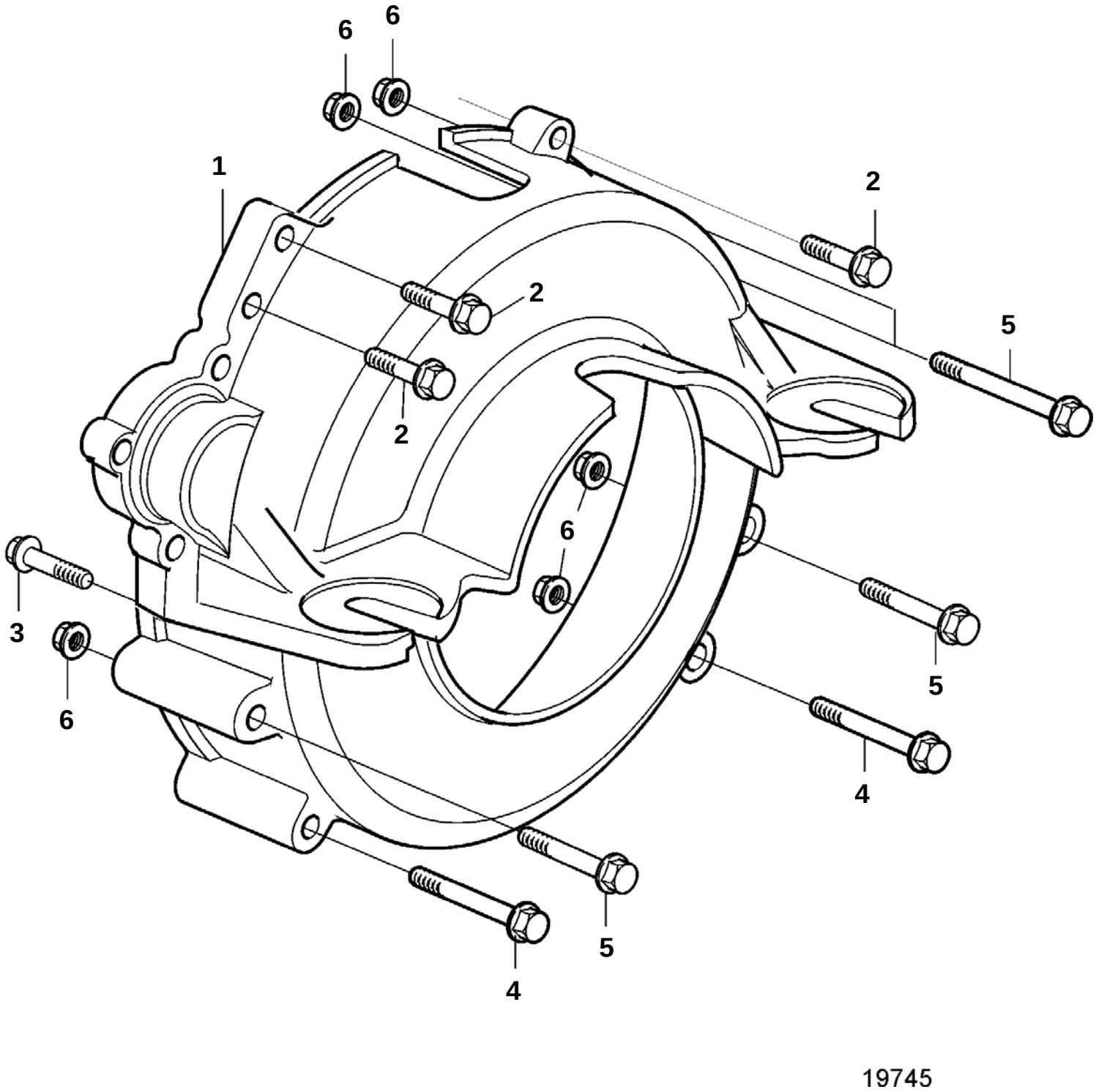

D3-130A-A, D3-130A-B, D3-130A-C, D3-160A-A, D3-160A-B, D3-160A-C, D3-190A-B, D3-190A-C

REF	PART NO.	QTY	DESCRIPTION	NOTES
1	3819497	1	Flywheel housing	(3584284)
2	965185	3	Flange screw	L=40mm
3	965188	1	Screw	L=70mm, Use only with Flywheel housing 3819497.
	947790	1	Flange screw, self-tapping	L=70mm, Use only with Flywheel housing 3584284.
4	965189	2	Flange screw	L=90mm
5	969313	4	Flange screw	L=110mm
6	971095	5	Nut	

D3-110I-A, D3-130A-A, D3-130I-A, D3-160A-A, D3-160I-A

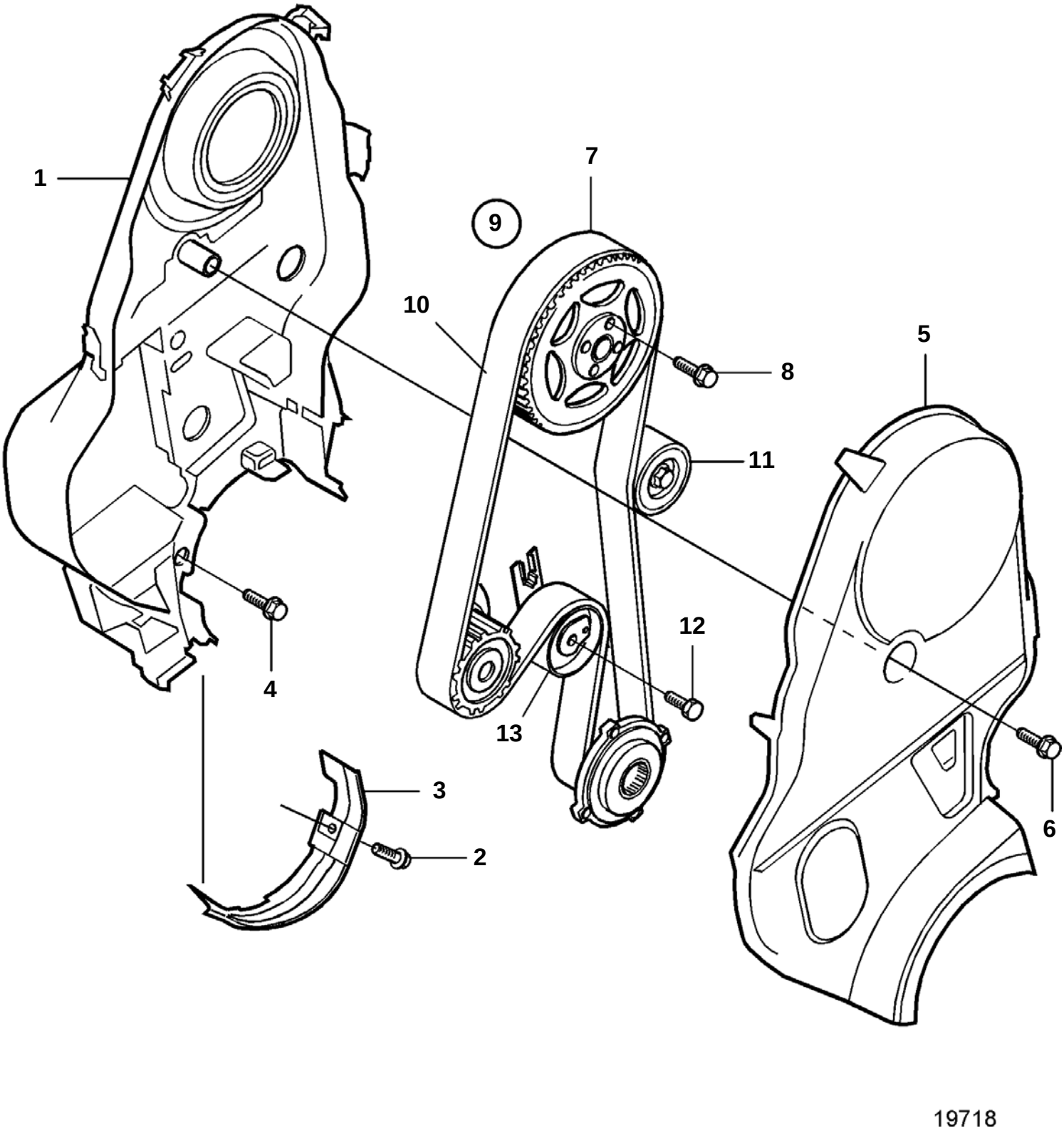

D3-110I-A, D3-130A-A, D3-130I-A, D3-160A-A, D3-160I-A

REF	PART NO.	QTY	DESCRIPTION	NOTES
1	8631626	1	Timing gear casing	
2	981311	2	Flange screw	
3	30729799	1	Belt protector	
4	982384	4	6 point socket screw	M6x11,5mm
5	30731283	1	Belt protector	
6	981312	1	Flange screw	M7x48,5mm
7	8631554	1	Gear pulley	
8	968881	4	Flange screw	M8x25mm
9	30731772	1	Tooth belt	(274247)
10		1	· Tooth belt	
11	8692561	1	Pulley	
12	985806	1	Screw	M8x53,5mm
13	30731774	1	Belt tensioner	(30677134)

D3-110I-B, D3-110I-C, D3-130A-B, D3-130I-B, D3-130A-C, D3-130I-C, D3-160A-B, D3-160I-B, D3-160A-C, D3-160I-C, D3-190A-B, D3-190I-B, D3-190A-C, D3-190I-C

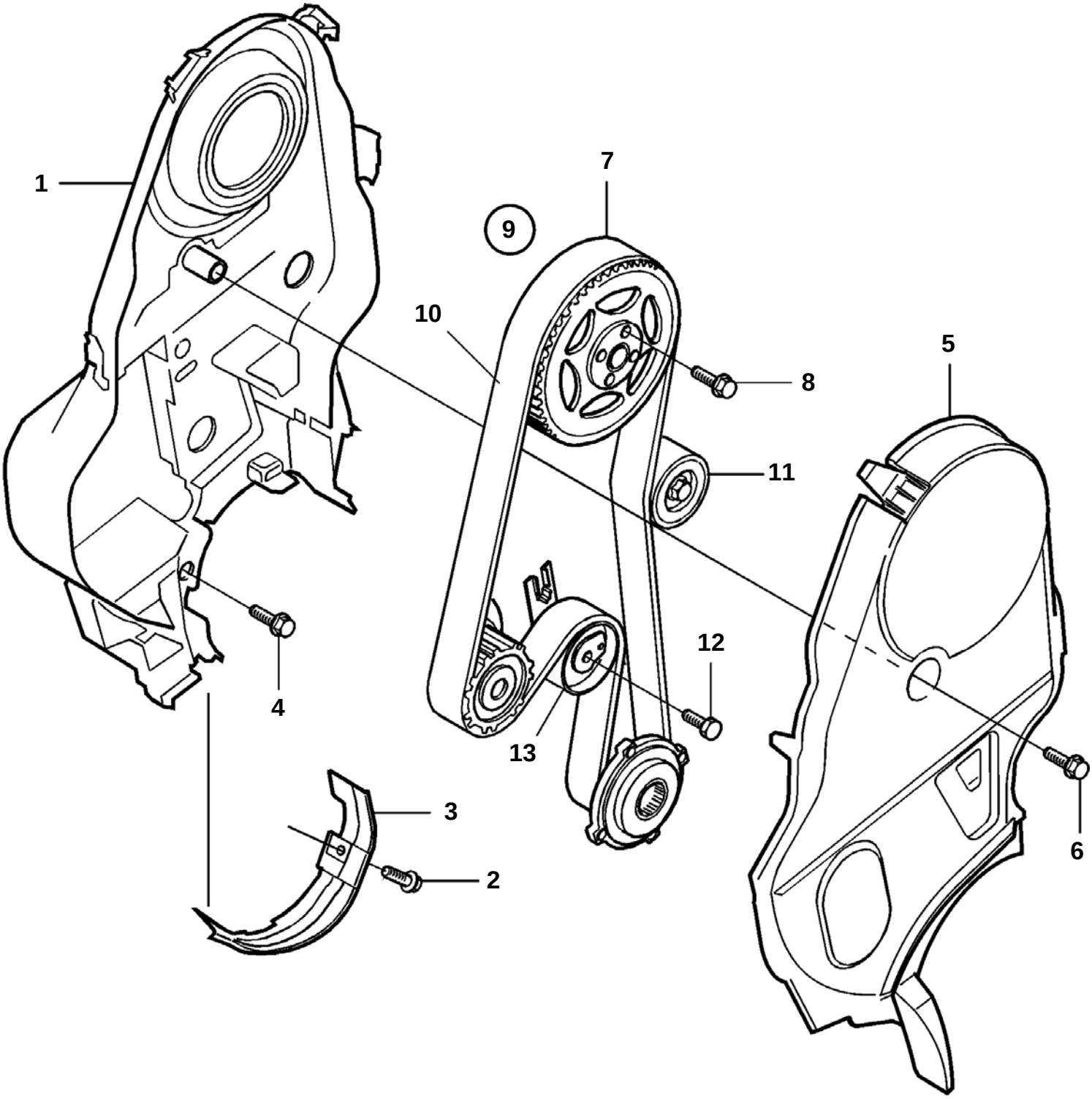

22729

D3-110I-B, D3-110I-C, D3-130A-B, D3-130I-B, D3-130A-C, D3-130I-C, D3-160A-B, D3-160I-B, D3-160A-C, D3-160I-C, D3-190A-B, D3-190I-B, D3-190A-C, D3-190I-C

REF	PART NO.	QTY	DESCRIPTION	NOTES
1	8631626	1	Timing gear casing	
2	981311	2	Flange screw	
3	30731907	1	Belt protector	
4	982384	4	6 point socket screw	M6x11,5mm
5	30731283	1	Belt protector	
6	981312	1	Flange screw	M7x48,5mm
7	8631554	1	Gear pulley	
8	968881	4	Flange screw	M8x25mm
9	30731772	1	Tooth belt	
10		1	・ Tooth belt	
11	8692561	1	Pulley	
12	985806	1	Screw	M8x53,5mm
13	30731774	1	Belt tensioner	

D3-110I-A, D3-130A-A, D3-130I-A, D3-160A-A, D3-160I-A

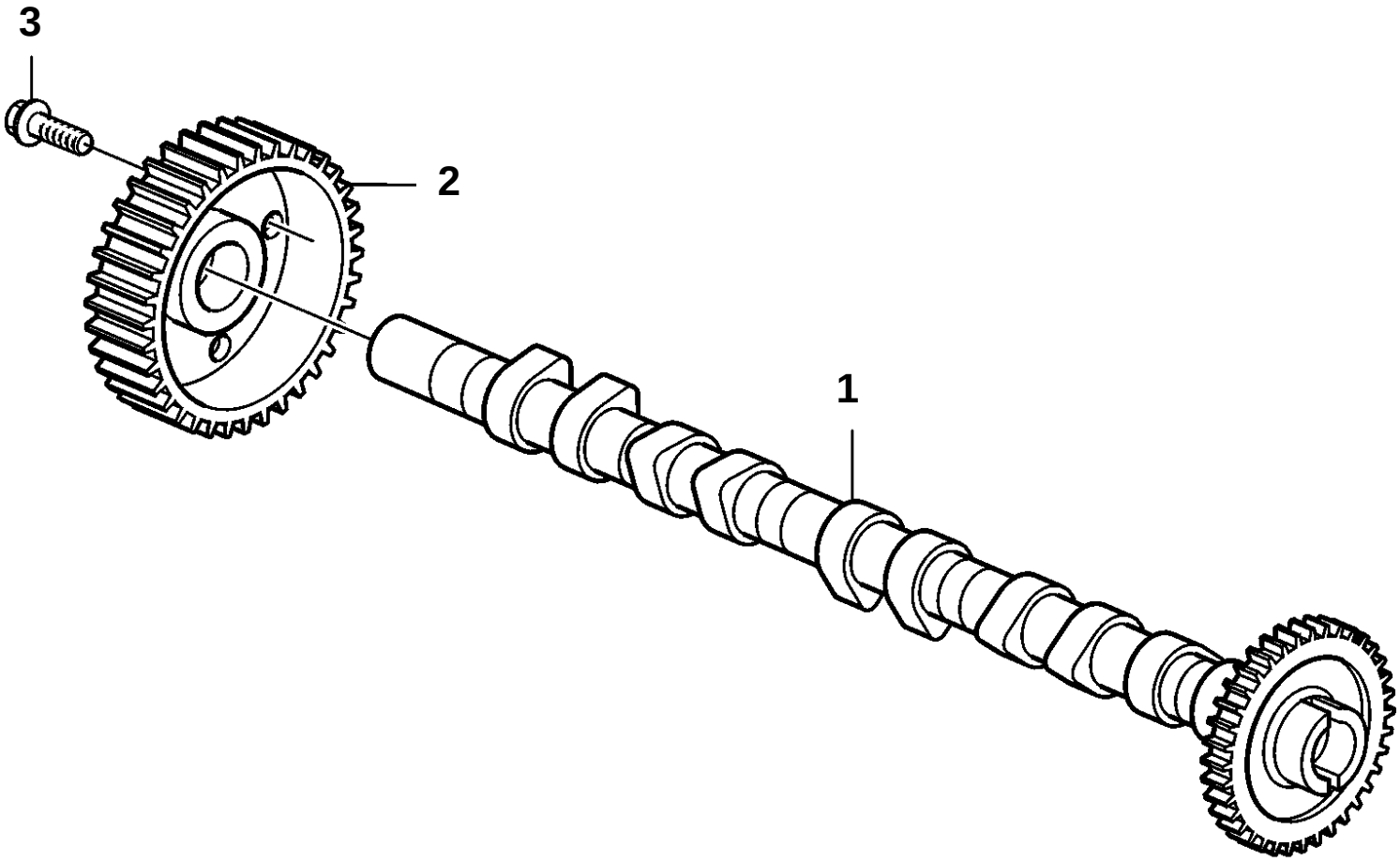

19715

D3-110I-A, D3-130A-A, D3-130I-A, D3-160A-A, D3-160I-A

REF	PART NO.	QTY	DESCRIPTION	NOTES
1	8658358	1	Camshaft, intake	Use connection block 8627612, Replaced by 30731214
	30731214	1	Camshaft, intake	Replaced by 8699506, Use connection block 8627612
	8699506	1	Camshaft, intake	Replaced by 30677509, Use connection block 8653606
	30677509	1	Camshaft, intake	Use connection block 8653606
	30731132	1	Camshaft, exhaust	(8692976)
2	8631554	1	Gear pulley	
3	968881	4	Flange screw	

D3-110I-B, D3-110I-C, D3-130A-B, D3-130I-B, D3-130A-C, D3-130I-C, D3-160A-B, D3-160I-B, D3-160A-C, D3-160I-C, D3-190A-B, D3-190I-B, D3-190A-C, D3-190I-C

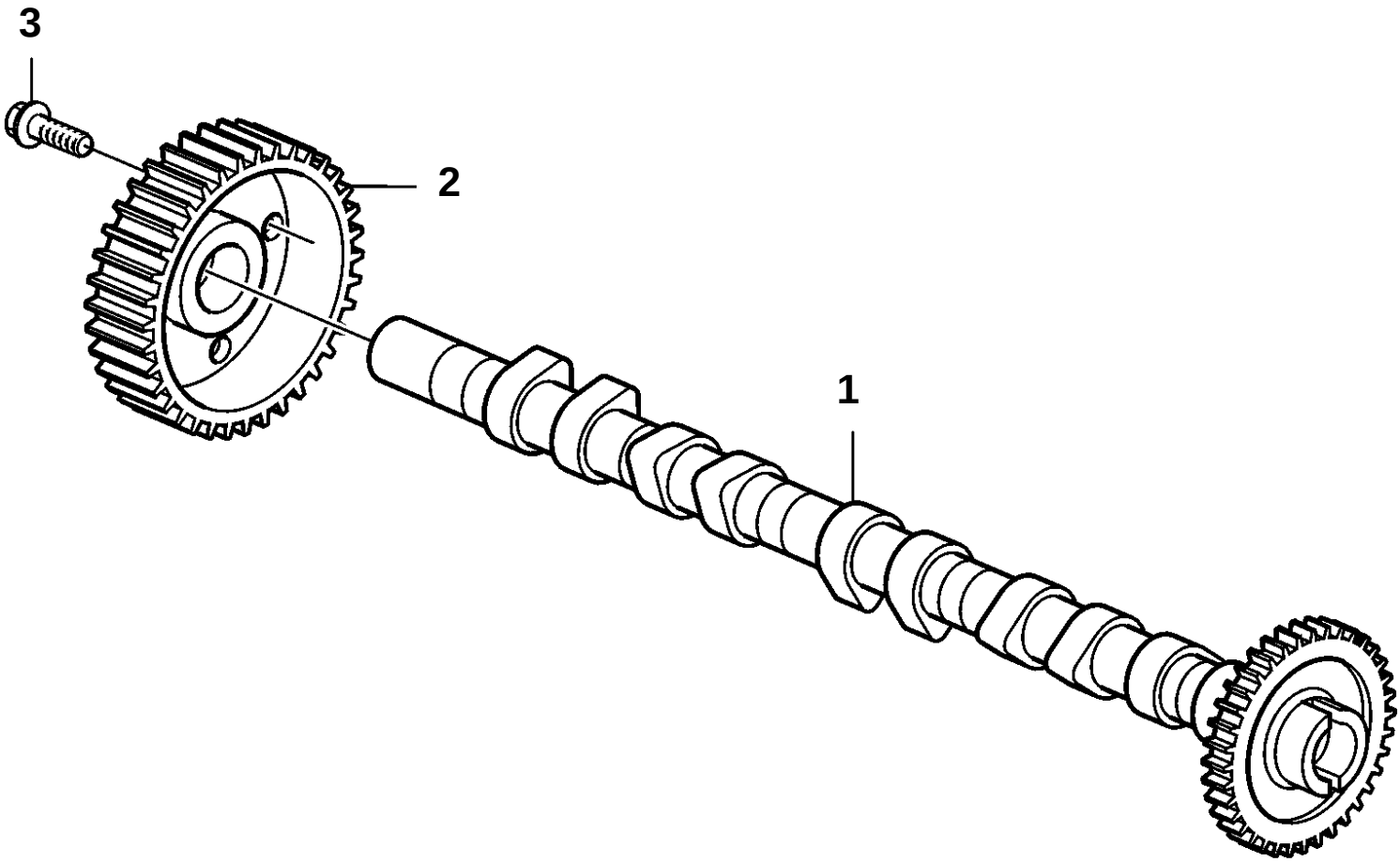

19715

D3-110I-B, D3-110I-C, D3-130A-B, D3-130I-B, D3-130A-C, D3-130I-C, D3-160A-B, D3-160I-B, D3-160A-C, D3-160I-C, D3-190A-B, D3-190I-B, D3-190A-C, D3-190I-C

REF	PART NO.	QTY	DESCRIPTION	NOTES
1	8699506	1	Camshaft, intake	Use connection block 8653606, Replaced by 30677509
	30677509	1	Camshaft, intake	Use connection block 8653606
	30731132	1	Camshaft, exhaust	
2	8631554	1	Gear pulley	
3	968881	4	Flange screw	

D3-110I-A, D3-130I-A, D3-160I-A

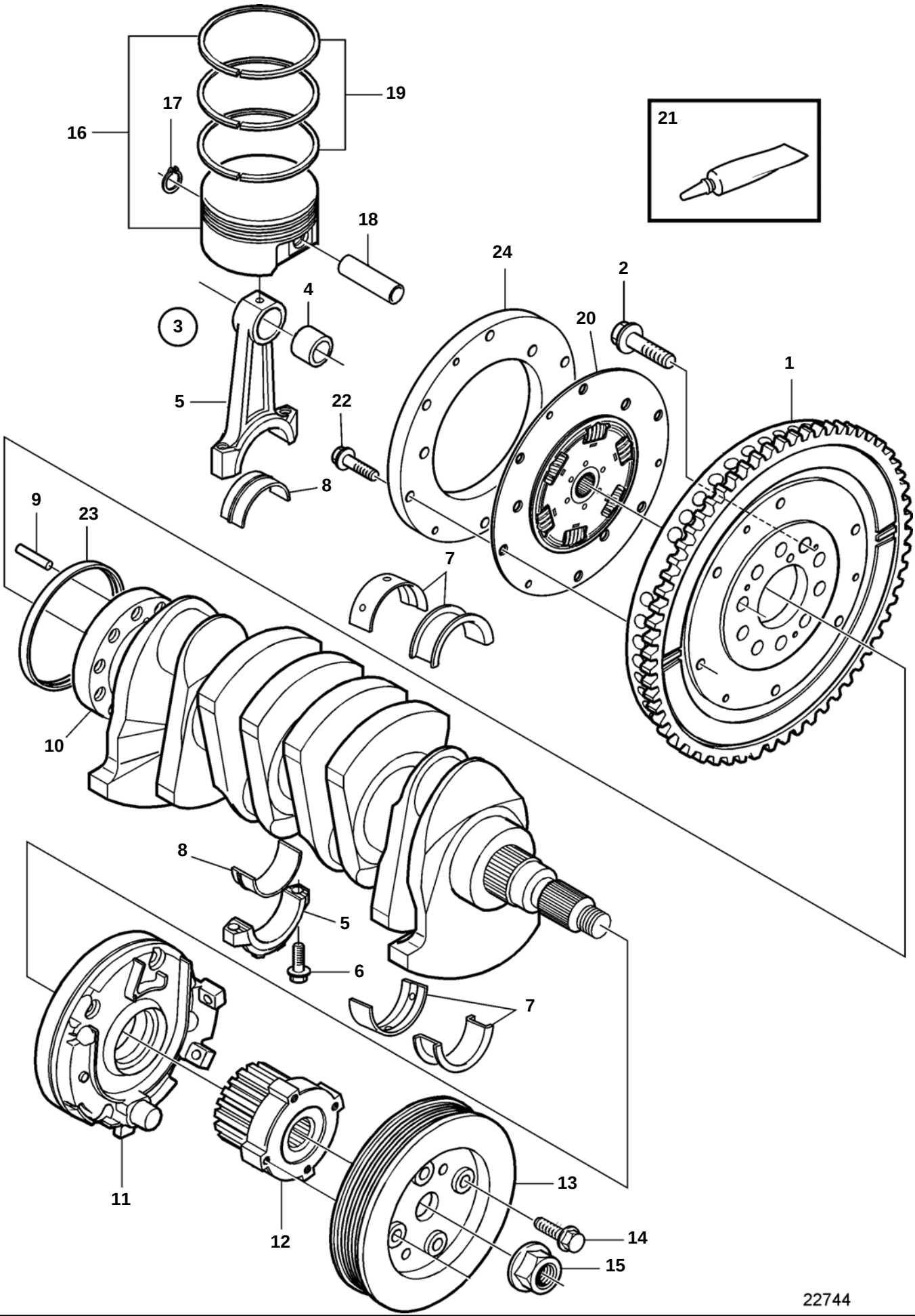

D3-110I-A, D3-130I-A, D3-160I-A

REF	PART NO.	QTY	DESCRIPTION	SEE SEC.	NOTES
1	30681145	1	Flywheel		(8675012)
2	9454743	10	Screw		
3	8631505	5	Connecting rod		
4		1	· Bushing		
5		1	· Connecting rod		
6	9497858	2	· Screw		
7	274482	1	Main bearing kit, complete		Include all main bearings needed for overhauling the engine
	274483	5	· Main bearing kit, supplement kit		Without flange, red
	274484	5	· Main bearing kit, supplement kit		Without flange, yellow
	274485	5	· Main bearing kit, supplement kit		Without flange, blue
	274486	1	· Main bearing kit, supplement kit		With flange, red
	274487	1	· Main bearing kit, supplement kit		With flange, yellow
	274488	1	· Main bearing kit, supplement kit		With flange, blue
8	9180722	5	Big end bearing kit		
9	973660	1	Spring pin		
10	9465781	1	Crankshaft		
11		1	Oil pump	6342	
12	1275366	1	Pulley		
13	30637335	1	Vibration damper		
14	3531111	1	Nut		
15	969445	4	Flange screw		
16	30750764	1	Piston kit		Class C
	30750765	1	Piston kit		Class D
	30750766	1	Piston kit		Class E
17		1	· Lock ring		
18		1	· Piston pin		
19	30731740	1	Piston ring kit		STD
20	3807988	1	Clutch		
21		1	· Grease		
22	948217	6	Flange screw		
23	9458178	1	Sealing ring		
24	3809460	1	Vibration damper		

D3-110I-B, D3-130I-B, D3-160I-B, D3-190I-B

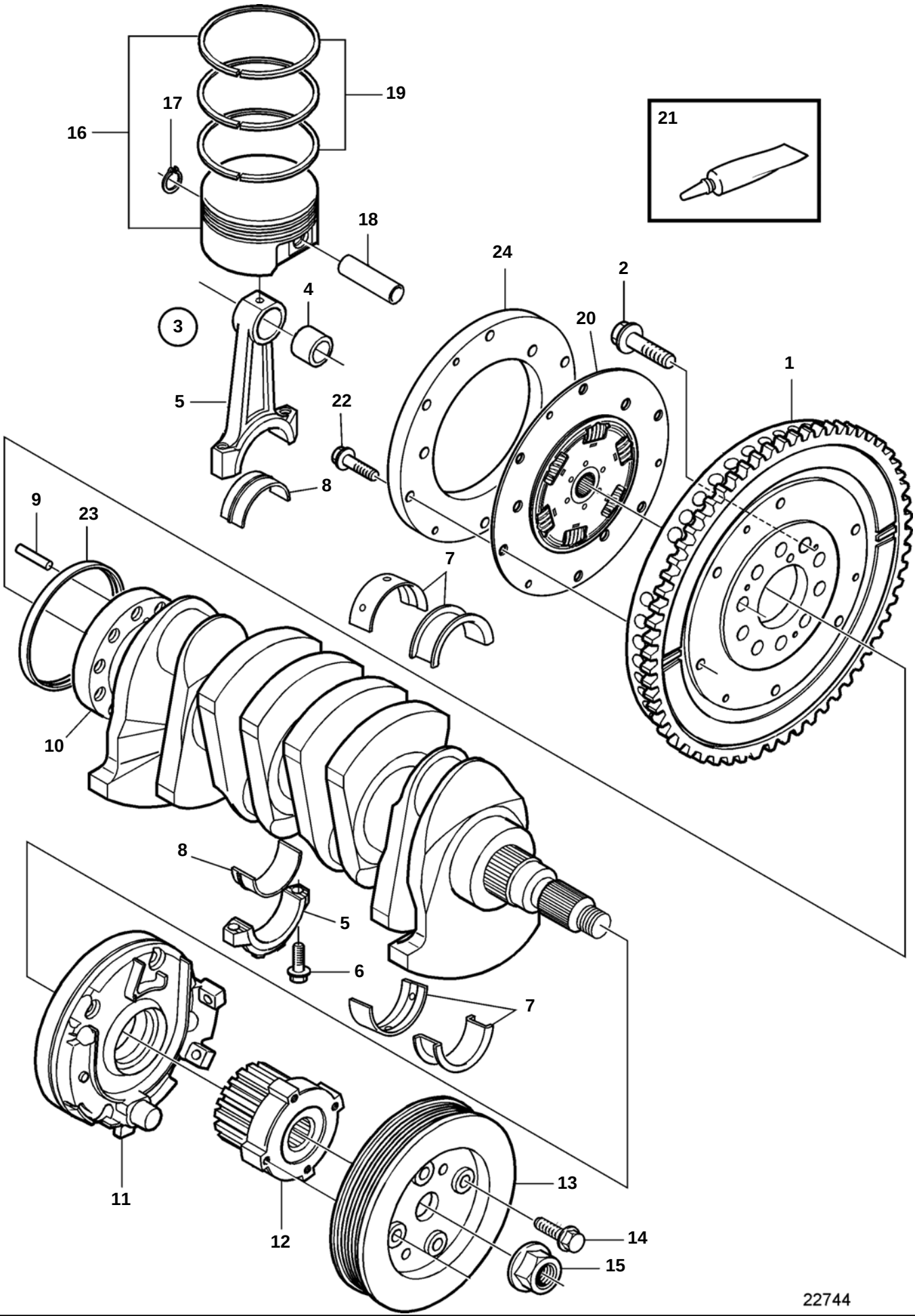

D3-110I-B, D3-130I-B, D3-160I-B, D3-190I-B

REF	PART NO.	QTY	DESCRIPTION	SEE SEC.	NOTES
1	30681145	1	Flywheel		
2	9454743	10	Screw		
3	8631505	5	Connecting rod		
4		1	· Bushing		
5		1	· Connecting rod		
6	9497858	2	· Screw		
7	274482	1	Main bearing kit, complete		Include all main bearings needed for overhauling the engine
	274483	5	· Main bearing kit, supplement kit		Without flange, red
	274484	5	· Main bearing kit, supplement kit		Without flange, yellow
	274485	5	· Main bearing kit, supplement kit		Without flange, blue
	274486	1	· Main bearing kit, supplement kit		With flange, red
	274487	1	· Main bearing kit, supplement kit		With flange, yellow
	274488	1	· Main bearing kit, supplement kit		With flange, blue
8	9180722	5	Big end bearing kit		
9	973660	1	Spring pin		
10	9465781	1	Crankshaft		
11		1	Oil pump	9514	
12	1275366	1	Pulley		
13	30637335	1	Vibration damper		
14	3531111	1	Nut		
15	969445	4	Flange screw		
16	30750674	1	Piston		Class C
	30750675	1	Piston		Class D
	30750676	1	Piston		Class E
17		1	· Lock ring		
18		1	· Piston pin		
19	30731740	1	Piston ring kit		STD, SN-327250
	30750678	1	Piston ring kit		STD, SN327251-
20	3807988	1	Clutch		
21		1	· Grease		
22	948217	6	Flange screw		
23	9458178	1	Sealing ring		
24	3809460	1	Vibration damper		

D3-110I-C, D3-130I-C, D3-160I-C, D3-190I-C

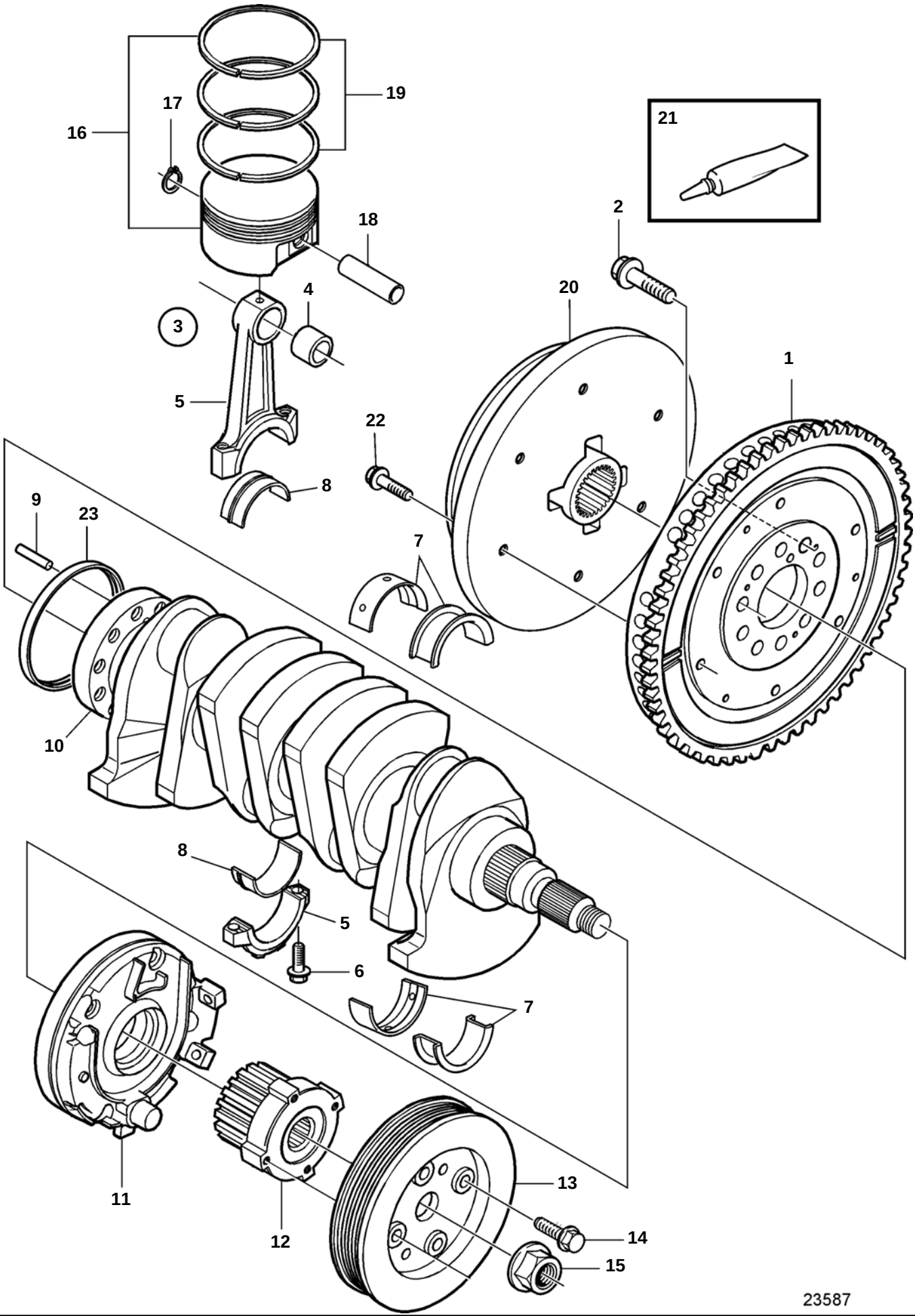

D3-110I-C, D3-130I-C, D3-160I-C, D3-190I-C

REF	PART NO.	QTY	DESCRIPTION	SEE SEC.	NOTES
1	3818392	1	Flywheel		
2	9454743	10	Screw		
3	8631505	5	Connecting rod		
4		1	· Bushing		
5		1	· Connecting rod		
6	9497858	2	· Screw		
7	274482	1	Main bearing kit, complete		Include all main bearings needed for overhauling the engine
	274483	5	· Main bearing kit, supplement kit		Without flange, red
	274484	5	· Main bearing kit, supplement kit		Without flange, yellow
	274485	5	· Main bearing kit, supplement kit		Without flange, blue
	274486	1	· Main bearing kit, supplement kit		With flange, red
	274487	1	· Main bearing kit, supplement kit		With flange, yellow
	274488	1	· Main bearing kit, supplement kit		With flange, blue
8	9180722	5	Big end bearing kit		
9	973660	1	Spring pin		
10	9465781	1	Crankshaft		
11		1	Oil pump	9514	
12	1275366	1	Pulley		
13	30637335	1	Vibration damper		
14	3531111	1	Nut		
15	969445	4	Flange screw		
16	30750674	1	Piston		Class C
	30750675	1	Piston		Class D
	30750676	1	Piston		Class E
17		1	· Lock ring		
18		1	· Piston pin		
19	30731740	1	Piston ring kit		STD, SN-327250
	30750678	1	Piston ring kit		STD, SN327251-
20	3819449	1	Coupling		
21		1	· Grease		
22	959222	6	Screw		
23	9458178	1	Sealing ring		

D3-130A-A, D3-160A-A

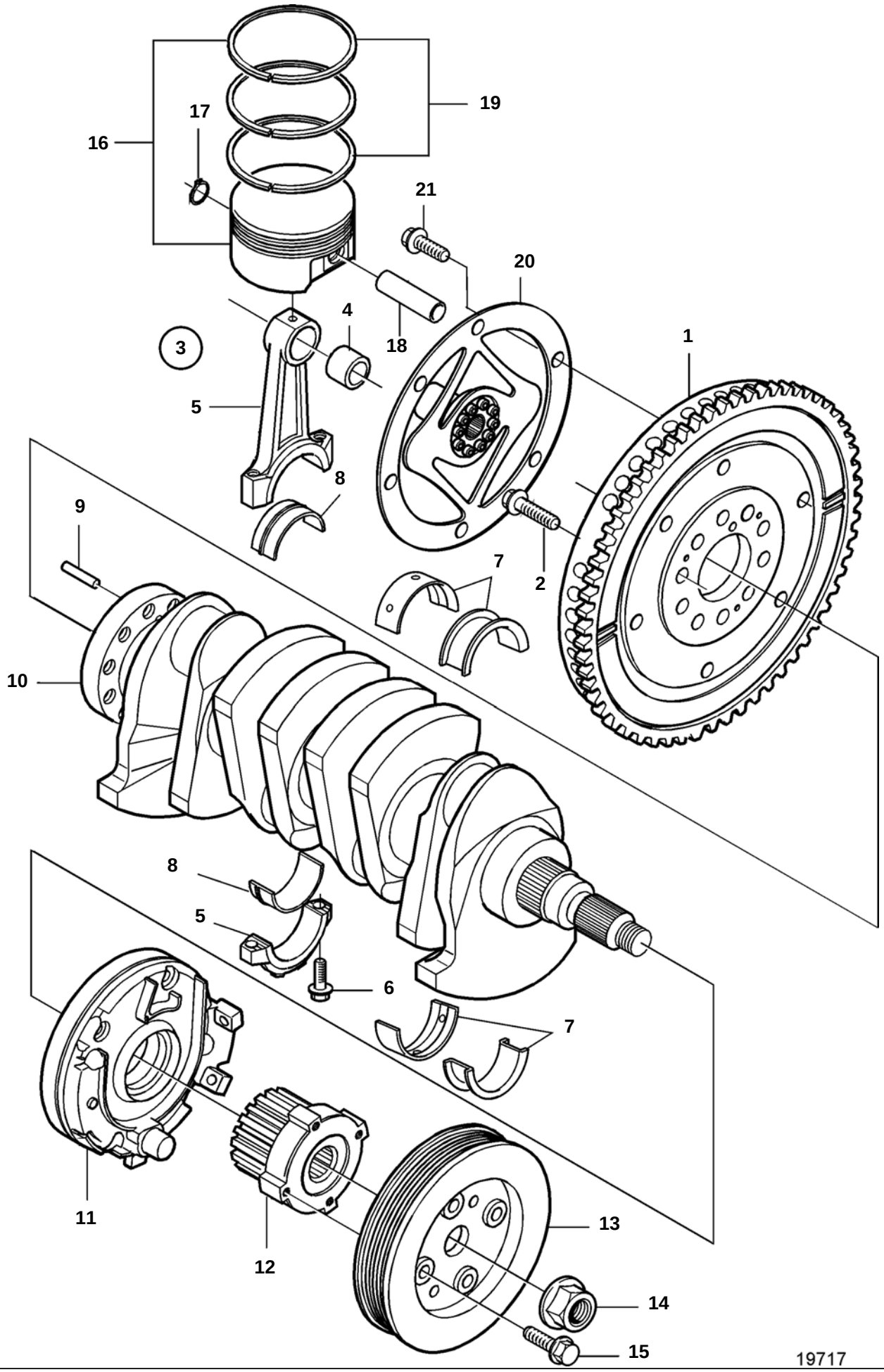

D3-130A-A, D3-160A-A

REF	PART NO.	QTY	DESCRIPTION	SEE SEC.	NOTES
1	30681145	1	Flywheel		(8675012)
2	9454743	10	Screw		
3	8631505	5	Connecting rod		
4		1	· Bushing		
5		1	· Connecting rod		
6	9497858	2	· Screw		
7	274482	1	Main bearing kit, complete		Include all main bearings needed for overhauling the engine
	274483	5	· Main bearing kit, supplement kit		Without flange, red
	274484	5	· Main bearing kit, supplement kit		Without flange, yellow
	274485	5	· Main bearing kit, supplement kit		Without flange, blue
	274486	1	· Main bearing kit, supplement kit		With flange, red
	274487	1	· Main bearing kit, supplement kit		With flange, yellow
	274488	1	· Main bearing kit, supplement kit		With flange, blue
8	9180722	5	Big end bearing kit		
9	973660	1	Spring pin		
10	9465781	1	Crankshaft		
11		1	Oil pump	6342	
12	1275366	1	Pulley		
13	30637335	1	Vibration damper		
14	3531111	1	Nut		
15	969445	4	Flange screw		
16	30750764	1	Piston kit		Class C
	30750765	1	Piston kit		Class D
	30750766	1	Piston kit		Class E
17		1	· Lock ring		
18		1	· Piston pin		
19	30731740	1	Piston ring kit		STD
20	3584285	1	Clutch		
21	944926	6	Flange screw		

D3-130A-A, D3-160A-A

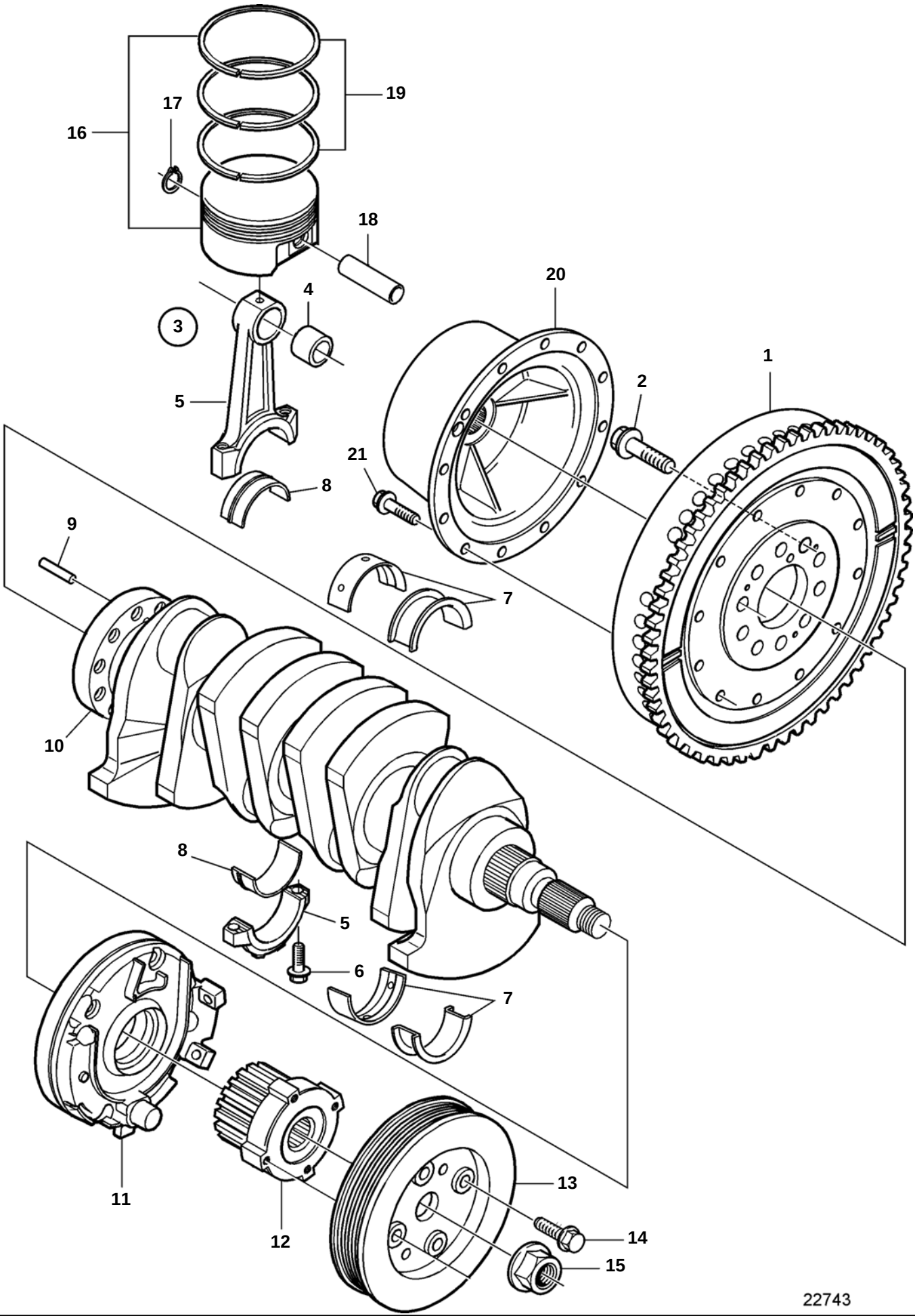

D3-130A-A, D3-160A-A

REF	PART NO.	QTY	DESCRIPTION	SEE SEC.	NOTES
1	3818392	1	Flywheel		
2	9454743	10	Screw		
3	8631505	5	Connecting rod		
4		1	· Bushing		
5		1	· Connecting rod		
6	9497858	2	· Screw		
7	274482	1	Main bearing kit, complete		Include all main bearings needed for overhauling the engine
	274483	5	· Main bearing kit, supplement kit		Without flange, red
	274484	5	· Main bearing kit, supplement kit		Without flange, yellow
	274485	5	· Main bearing kit, supplement kit		Without flange, blue
	274486	1	· Main bearing kit, supplement kit		With flange, red
	274487	1	· Main bearing kit, supplement kit		With flange, yellow
	274488	1	· Main bearing kit, supplement kit		With flange, blue
8	9180722	5	Big end bearing kit		
9	973660	1	Spring pin		
10	9465781	1	Crankshaft		
11		1	Oil pump	6342	
12	1275366	1	Pulley		
13	30637335	1	Vibration damper		
14	3531111	1	Nut		
15	969445	4	Flange screw		
16	30750764	1	Piston kit		Class C
	30750765	1	Piston kit		Class D
	30750766	1	Piston kit		Class E
17		1	· Lock ring		
18		1	· Piston pin		
19	30731740	1	Piston ring kit		STD
20	3851964	1	Clutch		
21	946671	6	Flange screw		

D3-130A-B, D3-130A-C, D3-160A-B, D3-160A-C, D3-190A-B, D3-190A-C

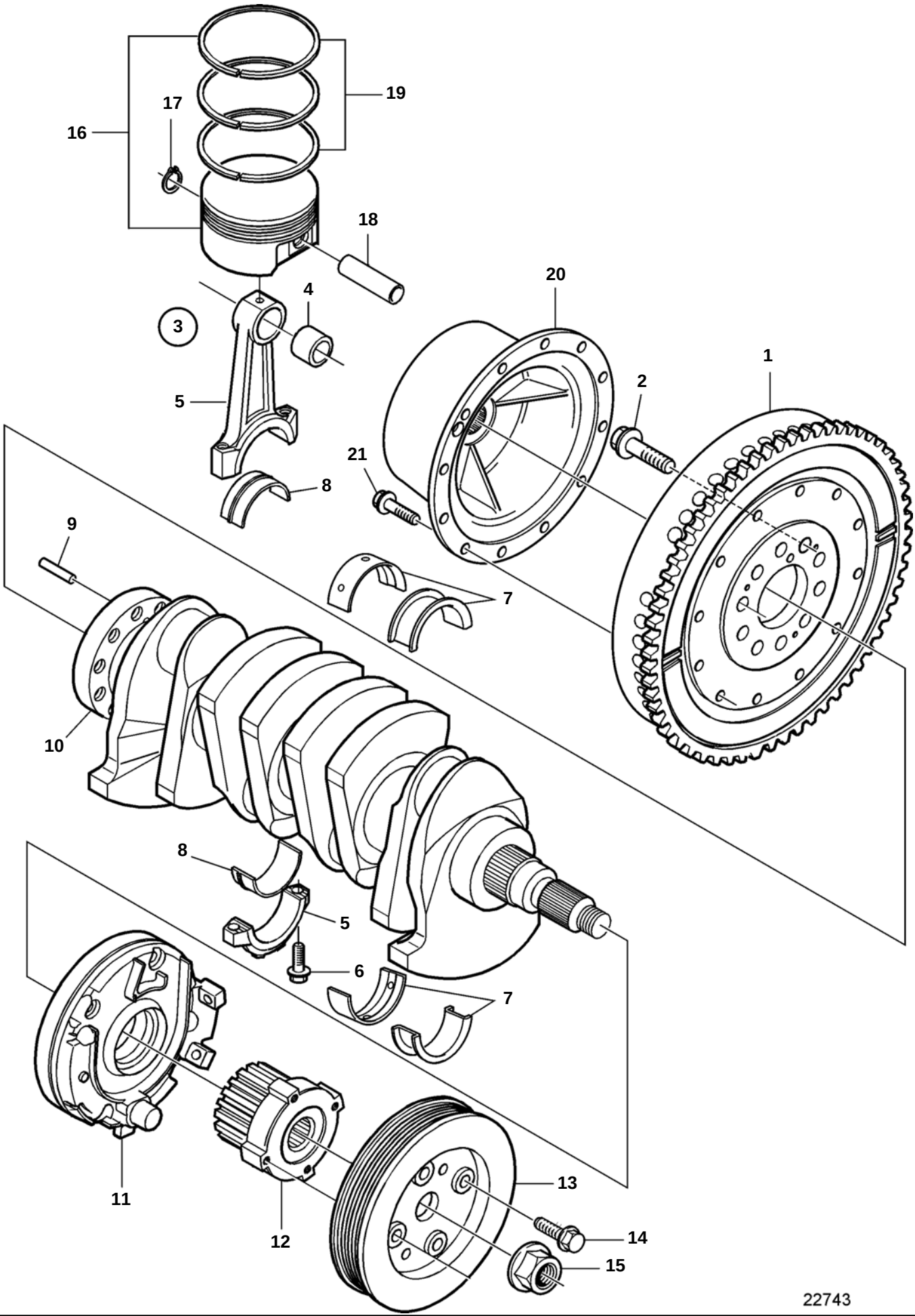

D3-130A-B, D3-130A-C, D3-160A-B, D3-160A-C, D3-190A-B, D3-190A-C

REF	PART NO.	QTY	DESCRIPTION	SEE SEC.	NOTES
1	3818392	1	Flywheel		
2	9454743	10	Screw		
3	8631505	5	Connecting rod		
4		1	· Bushing		
5		1	· Connecting rod		
6	9497858	2	· Screw		
7	274482	1	Main bearing kit, complete		Include all main bearings needed for overhauling the engine
	274483	5	· Main bearing kit, supplement kit		Without flange, red
	274484	5	· Main bearing kit, supplement kit		Without flange, yellow
	274485	5	· Main bearing kit, supplement kit		Without flange, blue
	274486	1	· Main bearing kit, supplement kit		With flange, red
	274487	1	· Main bearing kit, supplement kit		With flange, yellow
	274488	1	· Main bearing kit, supplement kit		With flange, blue
8	9180722	5	Big end bearing kit		
9	973660	1	Spring pin		
10	9465781	1	Crankshaft		
11		1	Oil pump	9514	
12	1275366	1	Pulley		
13	30637335	1	Vibration damper		
14	3531111	1	Nut		
15	969445	4	Flange screw		
16	30750674	1	Piston		Class C
	30750675	1	Piston		Class D
	30750676	1	Piston		Class E
17		1	· Lock ring		
18		1	· Piston pin		
19	30731740	1	Piston ring kit		STD, SN-327250
	30750678	1	Piston ring kit		STD, SN327251-
20	3851964	1	Clutch		
21	946671	6	Flange screw		

D3-110I-A, D3-110I-B, D3-110I-C, D3-130A-A, D3-130I-A, D3-130A-B, D3-130I-B, D3-130A-C, D3-130I-C, D3-160A-A, D3-160I-A, D3-160A-B, D3-160I-B, D3-160A-C, D3-160I-C, D3-190A-B, D3-190I-B, D3-190A-C, D3-190I-C

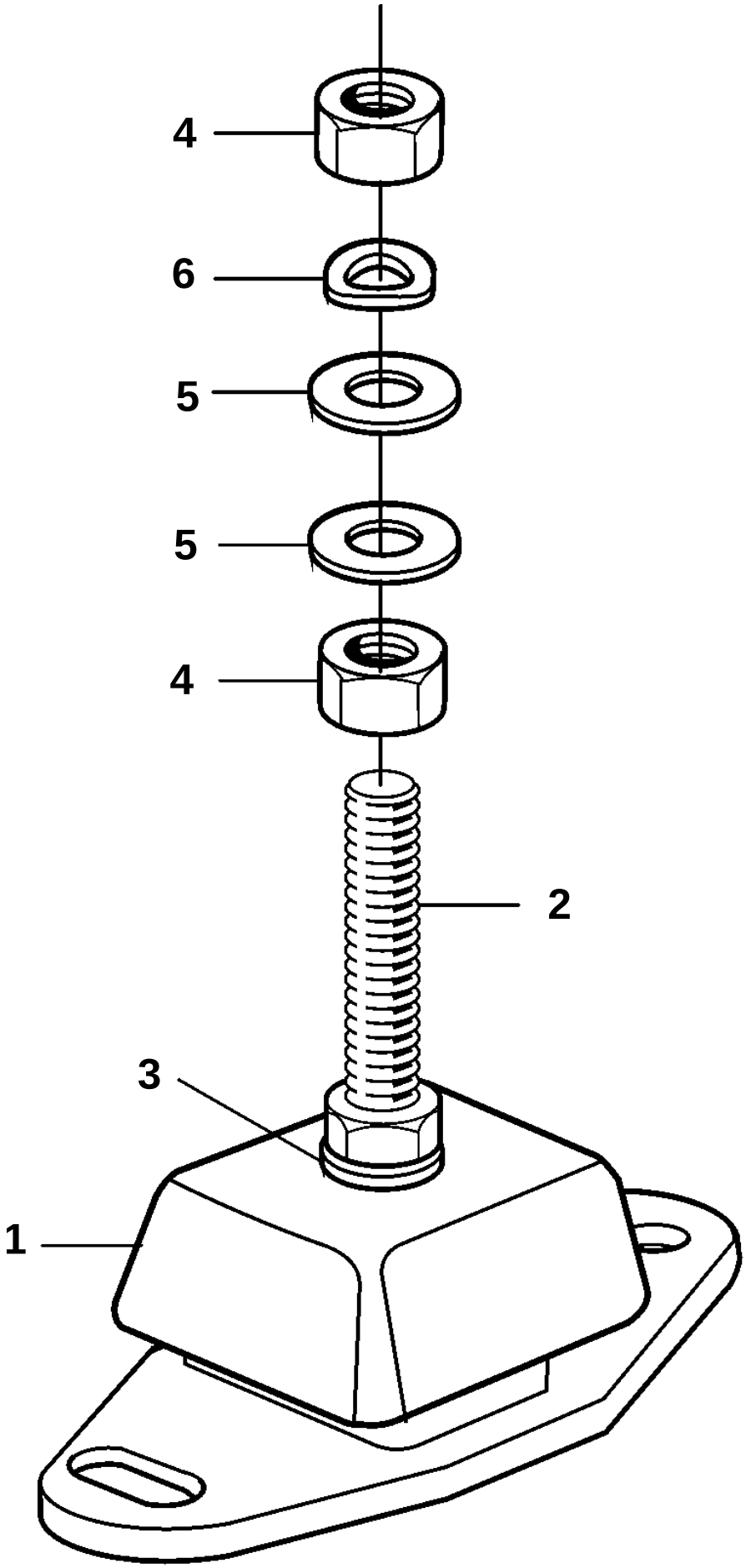

D3-110I-A, D3-110I-B, D3-110I-C, D3-130A-A, D3-130I-A, D3-130A-B, D3-130I-B, D3-130A-C, D3-130I-C, D3-160A-A, D3-160I-A, D3-160A-B, D3-160I-B, D3-160A-C, D3-160I-C, D3-190A-B, D3-190I-B, D3-190A-C, D3-190I-C

REF	PART NO.	QTY	DESCRIPTION
1	846765	2	Rubber cushion
2	860950	2	Adjuster screw
3	955900	2	Washer
4	955806	4	Nut
5	978991	4	Washer
6	941913	2	Spring washer

Engine Mounts for Reverse Gear HS25A-A and HS45A-A

D3-110I-A, D3-110I-B, D3-110I-C, D3-130I-A, D3-130I-B, D3-130I-C, D3-160I-A, D3-160I-B, D3-160I-C, D3-190I-B, D3-190I-C

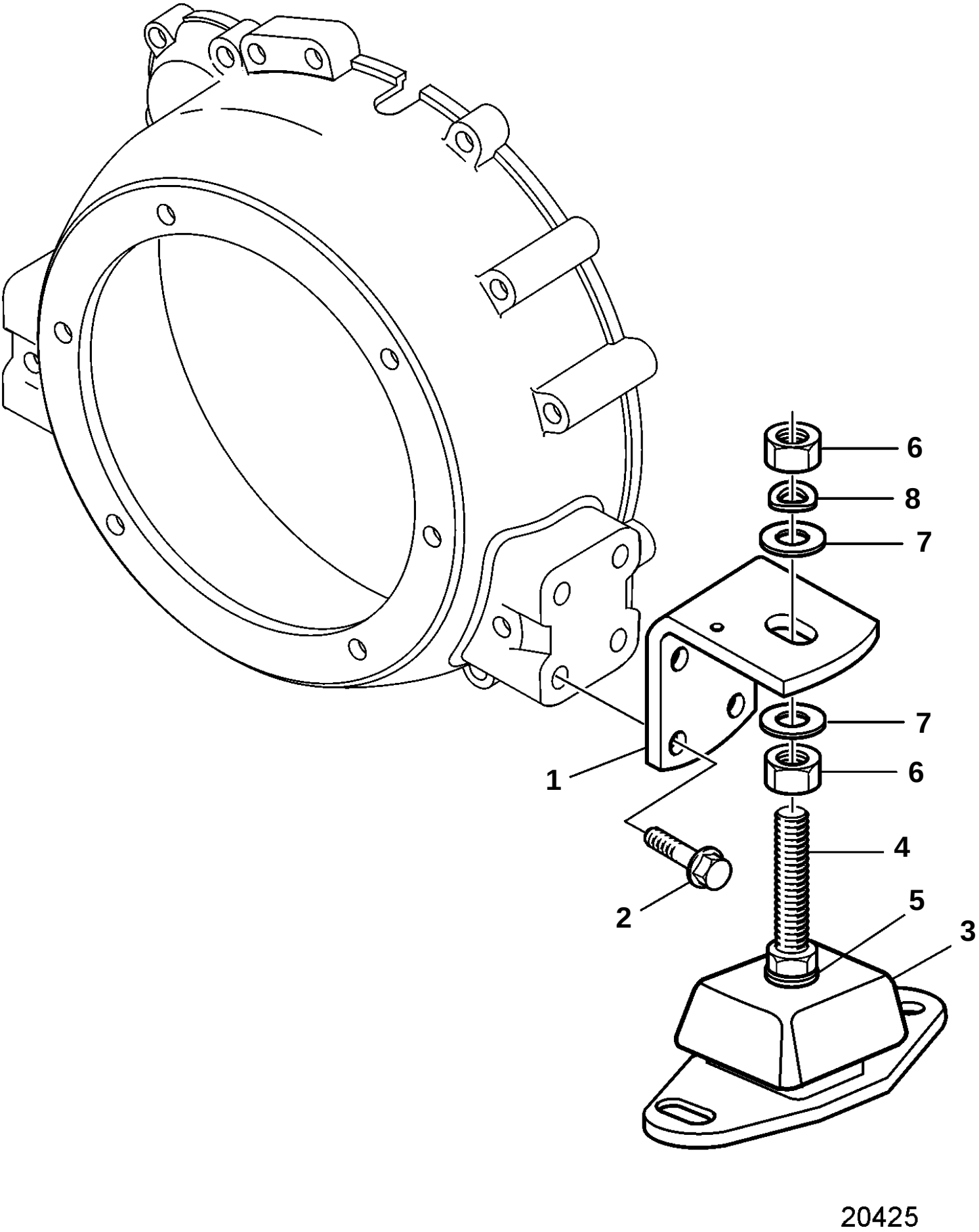

D3-110I-A, D3-110I-B, D3-110I-C, D3-130I-A, D3-130I-B, D3-130I-C, D3-160I-A, D3-160I-B, D3-160I-C, D3-190I-B, D3-190I-C

REF	PART NO.	QTY	DESCRIPTION
1	3589825	2	Bracket
2	965193	8	Screw
3	846765	2	Rubber cushion
4	860950	2	Adjuster screw
5	955900	2	Washer
6	955806	4	Nut
7	978991	4	Washer
8	941913	2	Spring washer

Engine Mounts for Reverse Gear HS63VE

D3-110I-A, D3-110I-B, D3-110I-C, D3-130I-A, D3-130I-B, D3-130I-C, D3-160I-A, D3-160I-B, D3-160I-C, D3-190I-B, D3-190I-C

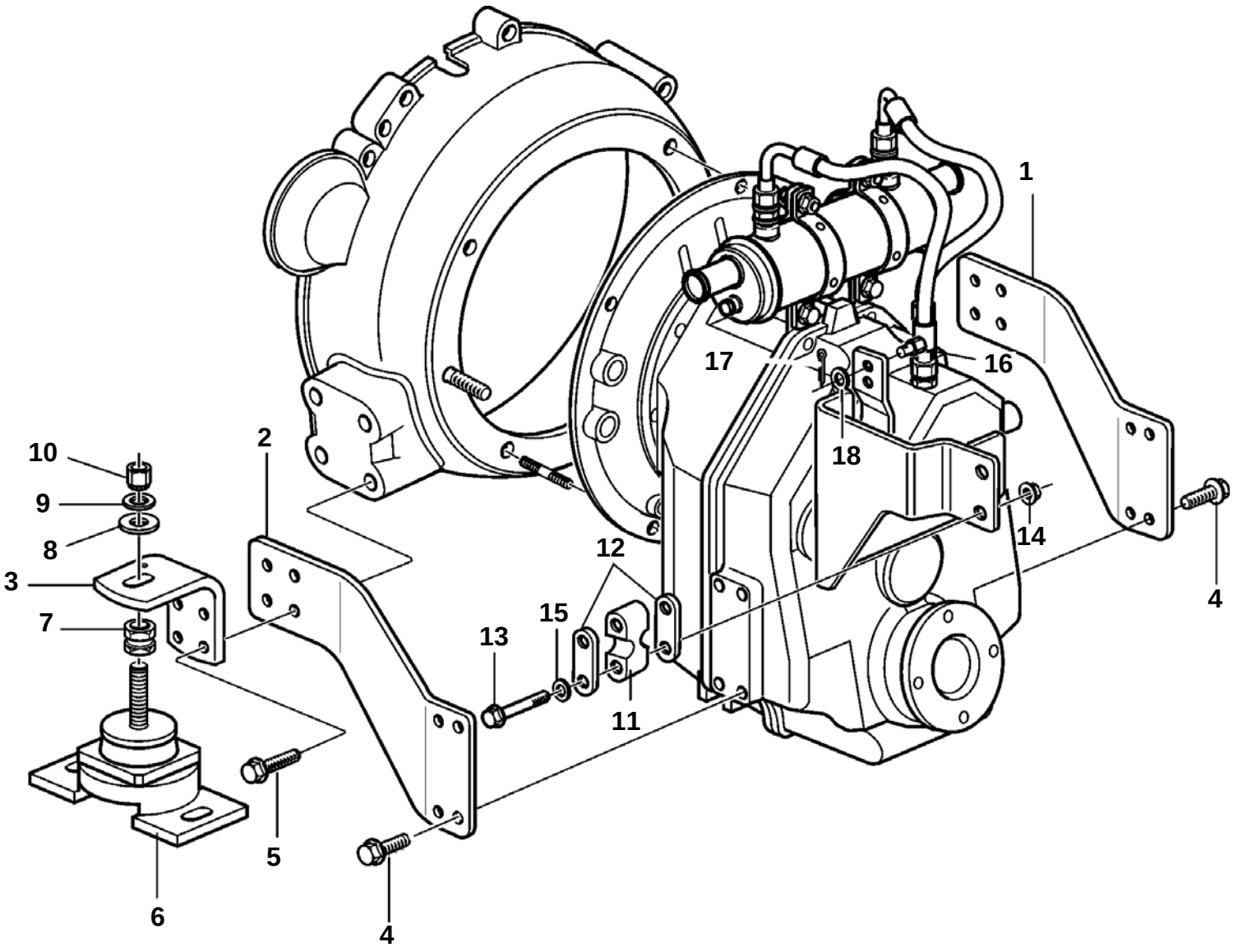

22705

D3-110I-A, D3-110I-B, D3-110I-C, D3-130I-A, D3-130I-B, D3-130I-C, D3-160I-A, D3-160I-B, D3-160I-C, D3-190I-B, D3-190I-C

REF	PART NO.	QTY	DESCRIPTION	NOTES
1	3817416	1	Bracket	
2	3817414	1	Bracket	
3	3817418	2	Engine bracket	
4	965191	8	Screw	L=50mm
5	965227	8	Screw	L=55mm
6	3842098	2	Rubber cushion	
7	3826709	2	Adjusting sleeve	
8	3832907	2	Spacer	
9	955900	2	Washer	
10	963110	2	Nut	
11	872074	1	Retainer	
12	872076	2	Washer	
13	969439	1	Screw	
14	949874	1	Lock nut	
15	940090	2	Washer	
16	3852329	1	Cube	
17	17276	1	Cotter pin	
18	941906	1	Spring washer	

D3-110I-A, D3-130A-A, D3-130I-A, D3-160A-A, D3-160I-A

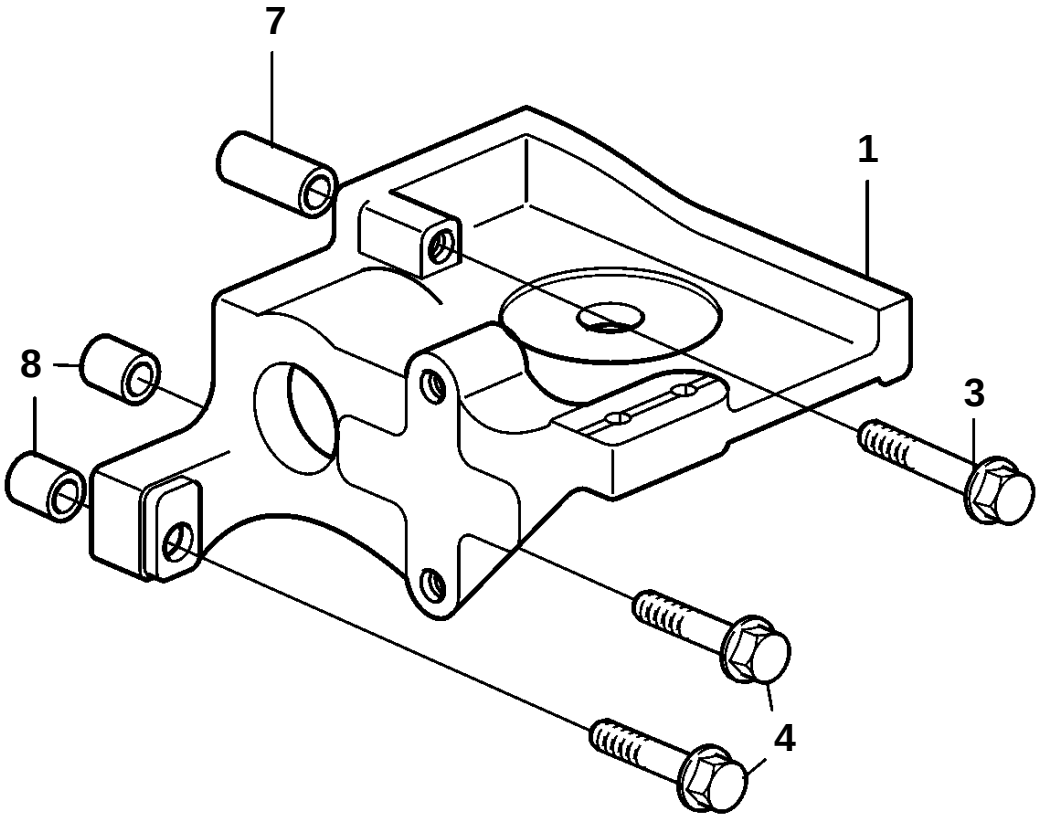

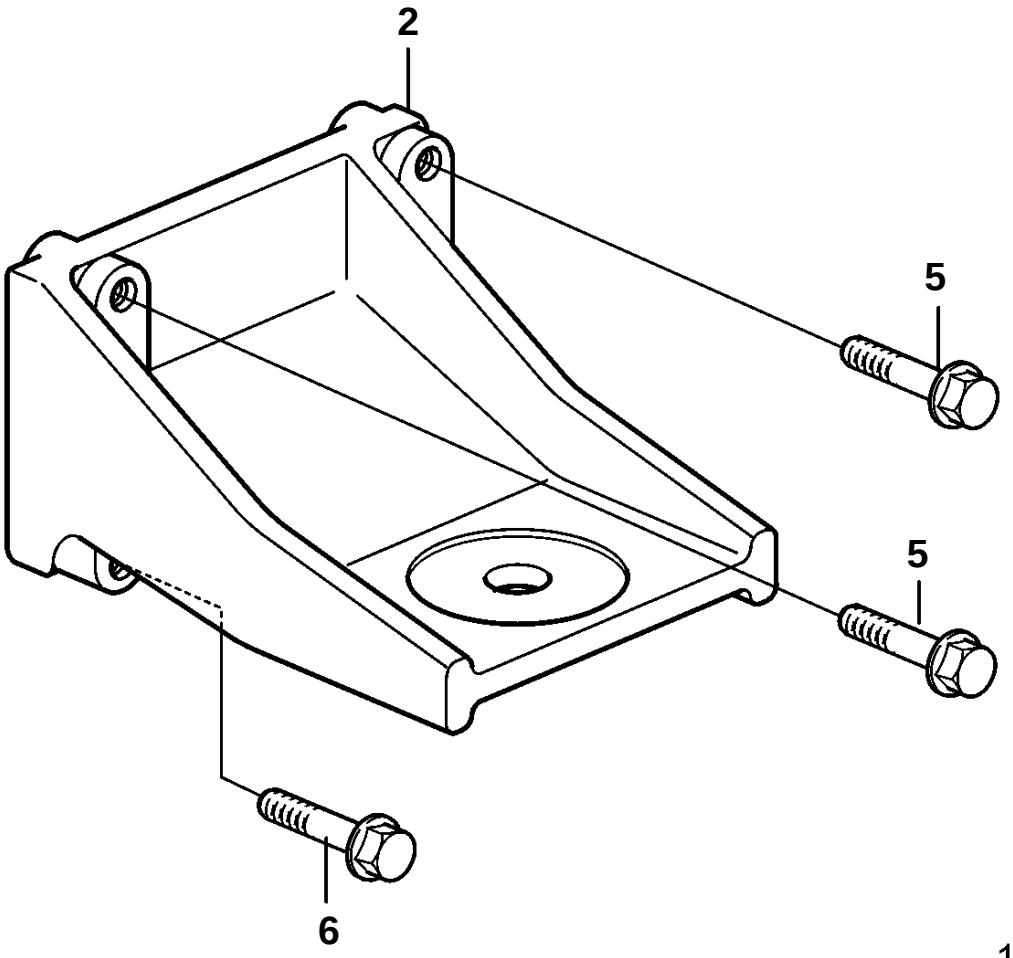

19688

D3-110I-A, D3-130A-A, D3-130I-A, D3-160A-A, D3-160I-A

REF	PART NO.	QTY	DESCRIPTION
1	888436	1	Engine bracket, left
2	3883173	1	Engine mountings, right
3	984652	1	Flange screw
4	984651	2	Flange screw
5	984663	3	Flange screw
6	984662	1	Flange screw
7	984644	1	Spacer sleeve
8	829653	2	Spacer sleeve

D3-110I-B, D3-110I-C, D3-130A-B, D3-130I-B, D3-130A-C, D3-130I-C, D3-160A-B, D3-160I-B, D3-160A-C, D3-160I-C, D3-190A-B, D3-190I-B, D3-190A-C, D3-190I-C

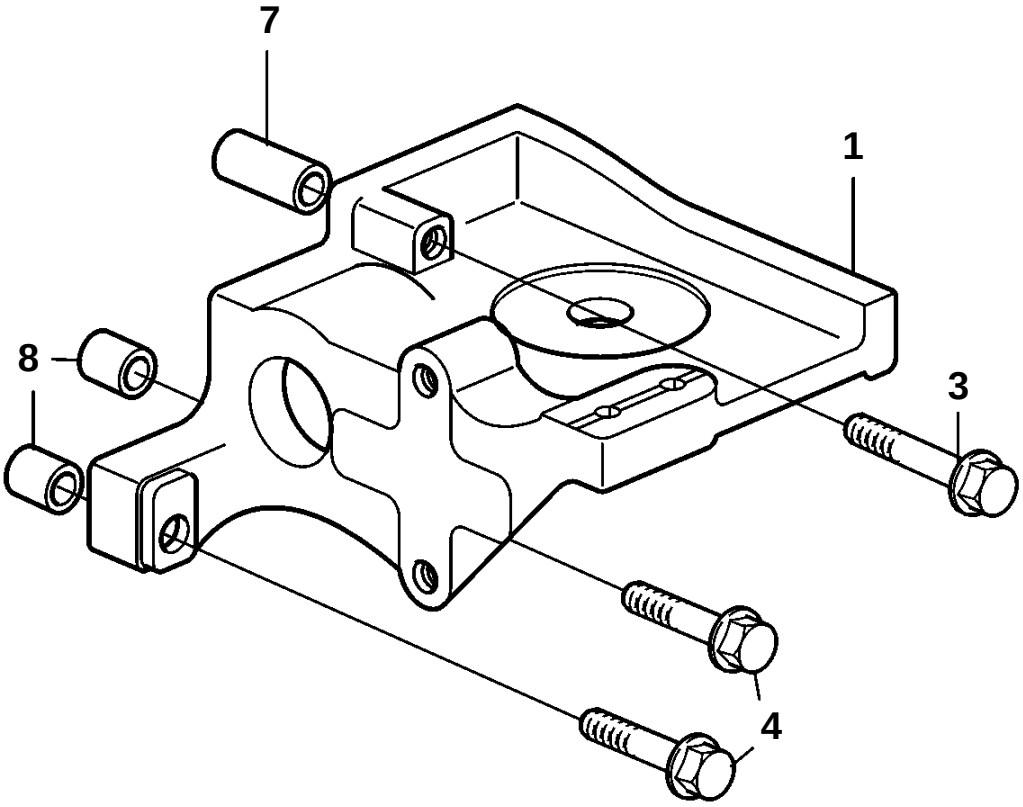

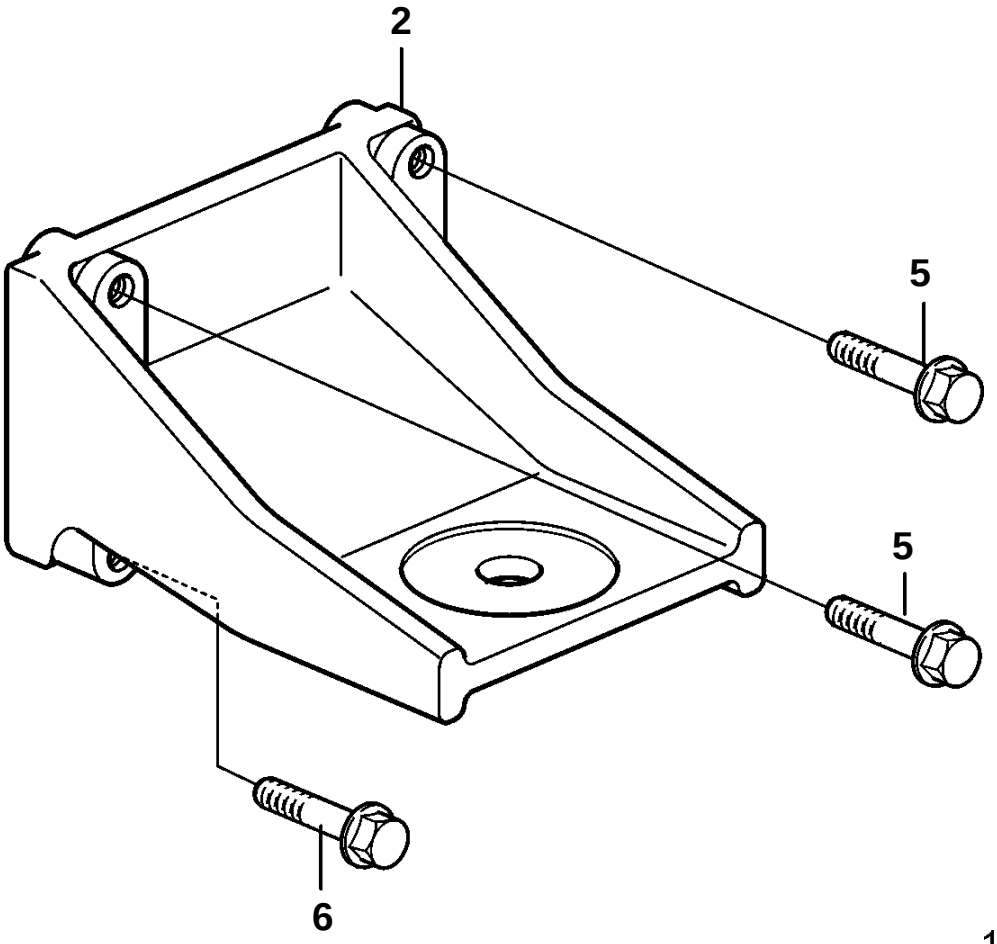

19688

D3-110I-B, D3-110I-C, D3-130A-B, D3-130I-B, D3-130A-C, D3-130I-C, D3-160A-B, D3-160I-B, D3-160A-C, D3-160I-C, D3-190A-B, D3-190I-B, D3-190A-C, D3-190I-C

REF	PART NO.	QTY	DESCRIPTION	NOTES
1	888436	1	Engine bracket, left	
2	3883173	1	Engine mountings, right	
3	984652	1	Flange screw	
4	984651	2	Flange screw	
5	984663	3	Flange screw	
6	984662	1	Flange screw	M8
	984663	1	Flange screw	M10
7	984644	1	Spacer sleeve	
8	829653	2	Spacer sleeve	

D3-130A-A, D3-130A-B, D3-130A-C, D3-160A-A, D3-160A-B, D3-160A-C, D3-190A-B, D3-190A-C

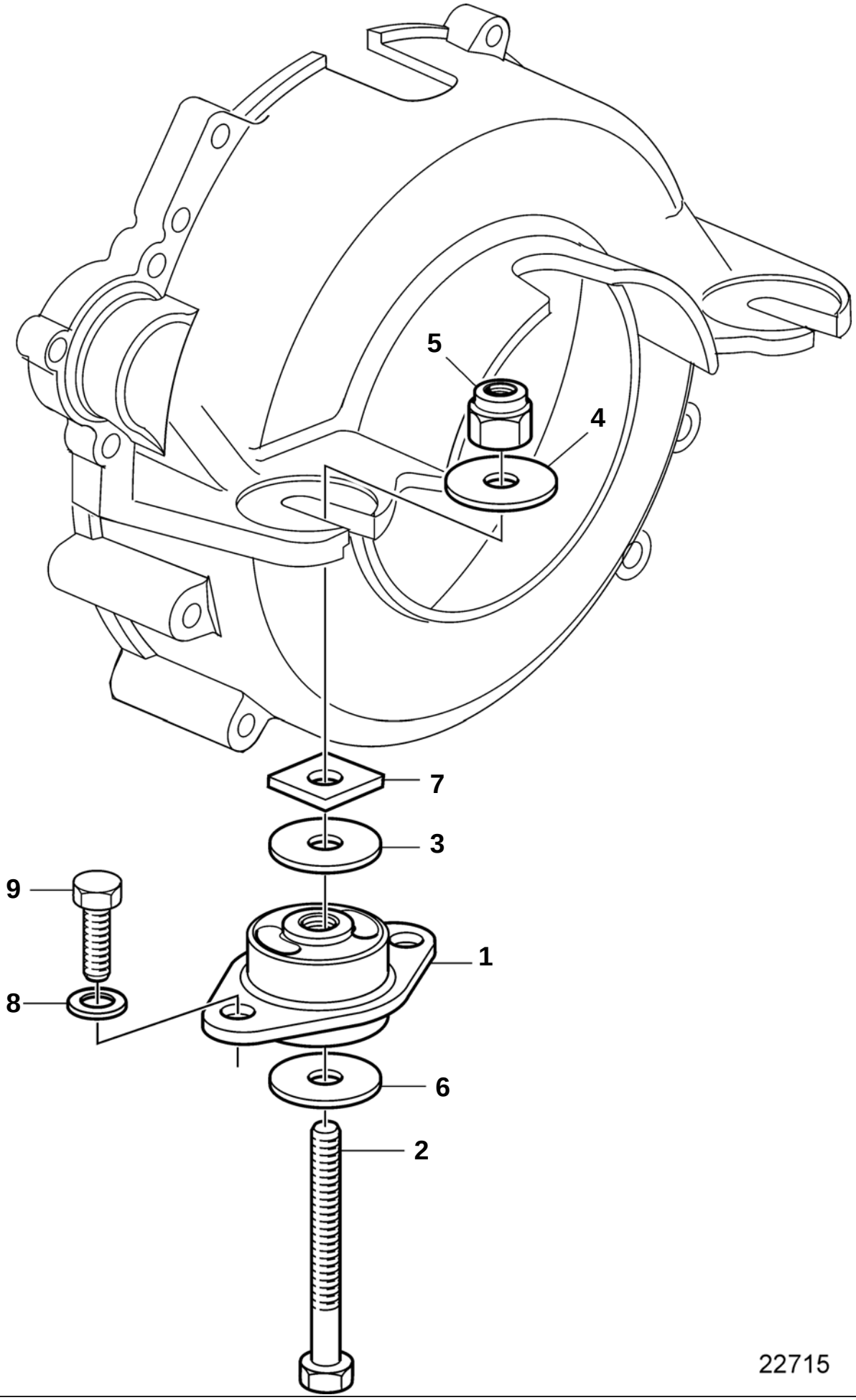

D3-130A-A, D3-130A-B, D3-130A-C, D3-160A-A, D3-160A-B, D3-160A-C, D3-190A-B, D3-190A-C

REF	PART NO.	QTY	DESCRIPTION
1	3812266	1	Rubber cushion
2	3587962	1	Screw
3	3852622	1	Washer
4	3852540	1	Washer
5	3862657	1	Nut
6	3852542	1	Washer
7	3852539	1	Nut
8	3852155	4	Washer
9	959968	4	Screw

D3-110I-A, D3-110I-B, D3-110I-C, D3-130A-A, D3-130I-A, D3-130A-B, D3-130I-B, D3-130A-C, D3-130I-C, D3-160A-A, D3-160I-A, D3-160A-B, D3-160I-B, D3-160A-C, D3-160I-C, D3-190A-B, D3-190I-B, D3-190A-C, D3-190I-C

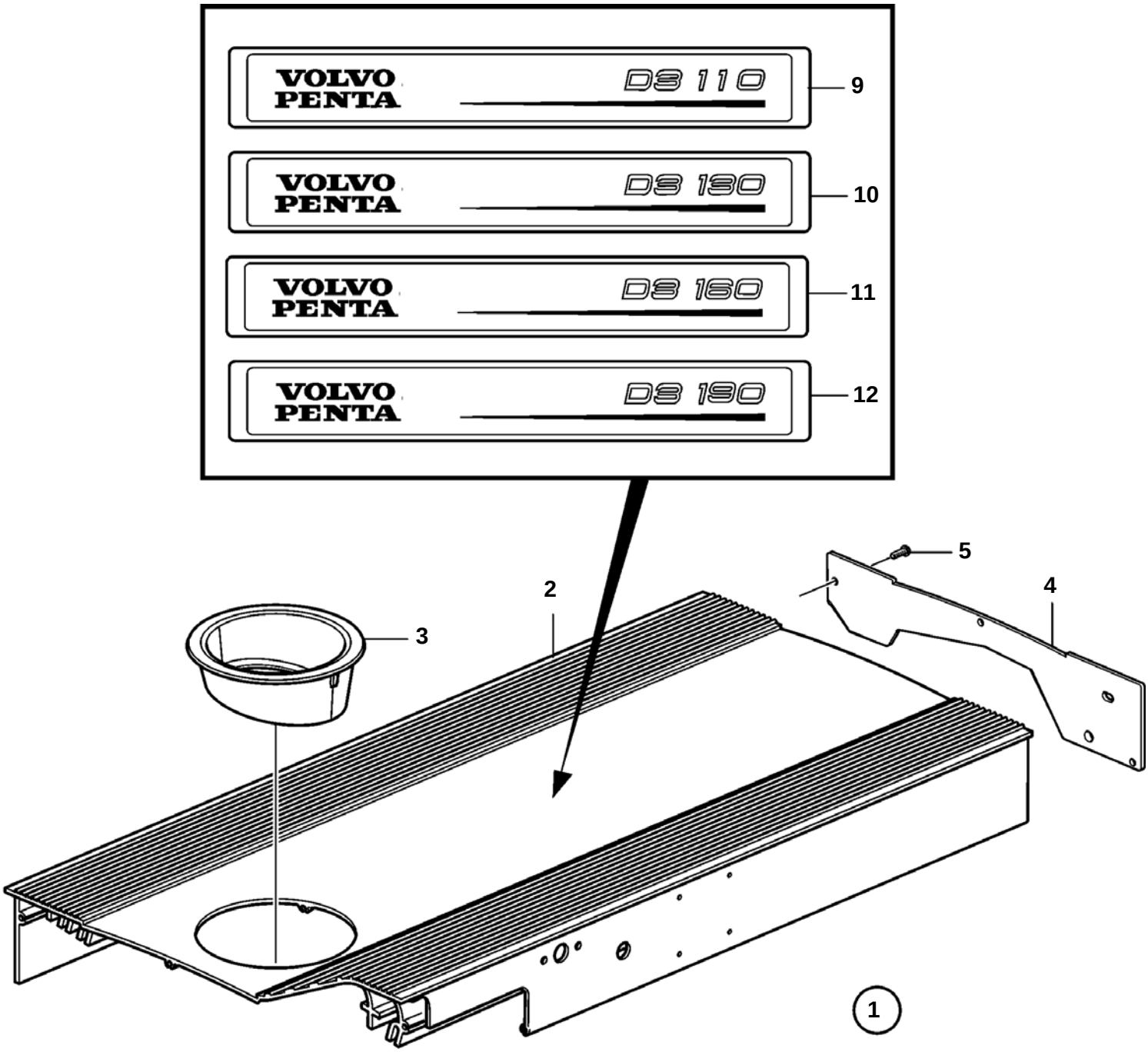

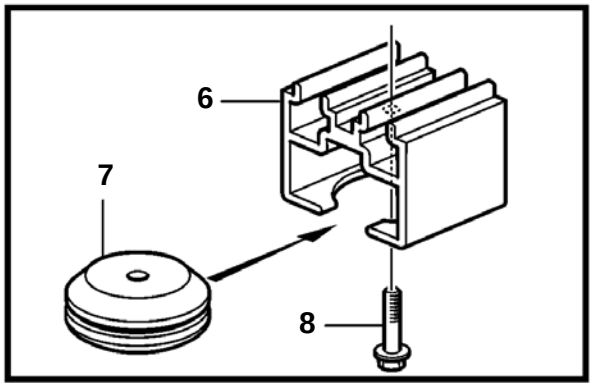

22726

D3-110I-A, D3-110I-B, D3-110I-C, D3-130A-A, D3-130I-A, D3-130A-B, D3-130I-B, D3-130A-C, D3-130I-C, D3-160A-A, D3-160I-A, D3-160A-B, D3-160I-B, D3-160A-C, D3-160I-C, D3-190A-B, D3-190I-B, D3-190A-C, D3-190I-C

REF	PART NO.	QTY	DESCRIPTION
1	3884631	1	Cover
2		1	· Cover
3	3812607	1	· Cup
4	3819953	1	· Cover plate
5	969456	4	· 6 point socket screw
6	888512	4	· Bracket
7	8642162	4	· Rubber cushion
8	969476	4	· Screw
9	888382	1	Decal
10	888383	1	Decal
11	3584298	1	Decal
12	3812572	1	Decal

D3-110I-A, D3-130A-A, D3-130I-A, D3-160A-A, D3-160I-A

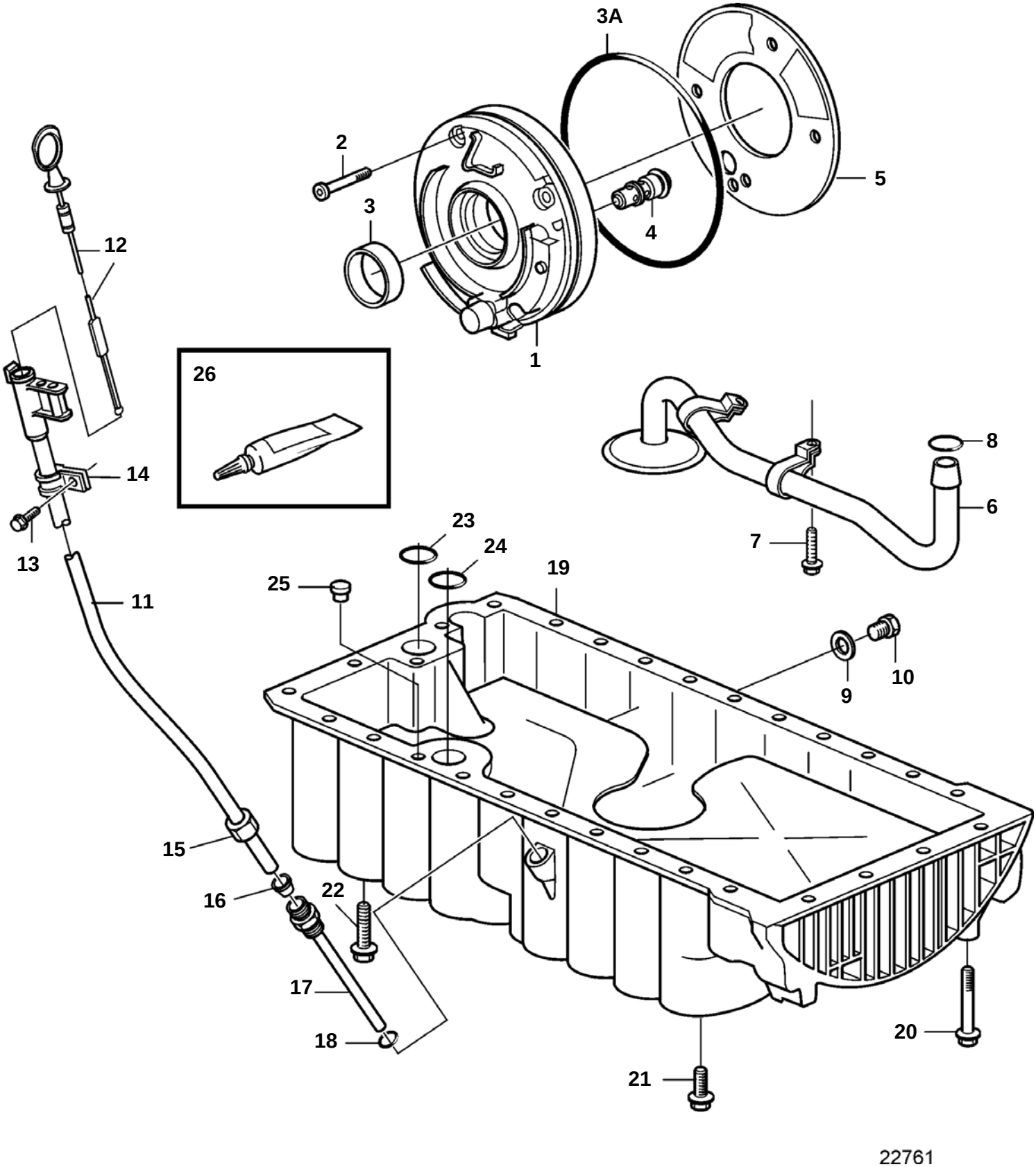

D3-110I-A, D3-130A-A, D3-130I-A, D3-160A-A, D3-160I-A

REF	PART NO.	QTY	DESCRIPTION	NOTES
1	30777092	1	Oil pump	(30637377)
2	980880	4	6 point socket screw	
3	6842273	1	Sealing ring	
3A	981204	1	O-ring	
4	8642166	1	Valve	
5	1275404	1	Gasket	
6	9186116	1	Oil suction pipe	
7	968814	1	Flange screw	
8	30637867	1	O-ring	
9	11998	1	Gasket	For servo pump.
10	3588129	1	Plug	For servo pump.
11	3589182	1	Tube	
12	3587638	1	Oil dipstick	
13	946544	1	Flange screw	Mount on Aftercooler
14	952627	1	Clamp	
15	956984	1	Nut	
16	980782	1	Ferrule	
17	3588212	1	Suction pipe	
18	958226	1	O-ring	
19	8631507	1	Oil pan	
20	980092	4	Flange screw	
21	975880	22	Flange screw	M7x20mm
22	985322	3	Screw	
23	8631513	1	Sealing ring	
24	8642560	1	Sealing ring	
25	463963	1	Valve	
26	1161059	1	Sealant	50ml

D3-110I-B, D3-110I-C, D3-130A-B, D3-130I-B, D3-130A-C, D3-130I-C, D3-160A-B, D3-160I-B, D3-160A-C, D3-160I-C, D3-190A-B, D3-190I-B, D3-190A-C, D3-190I-C

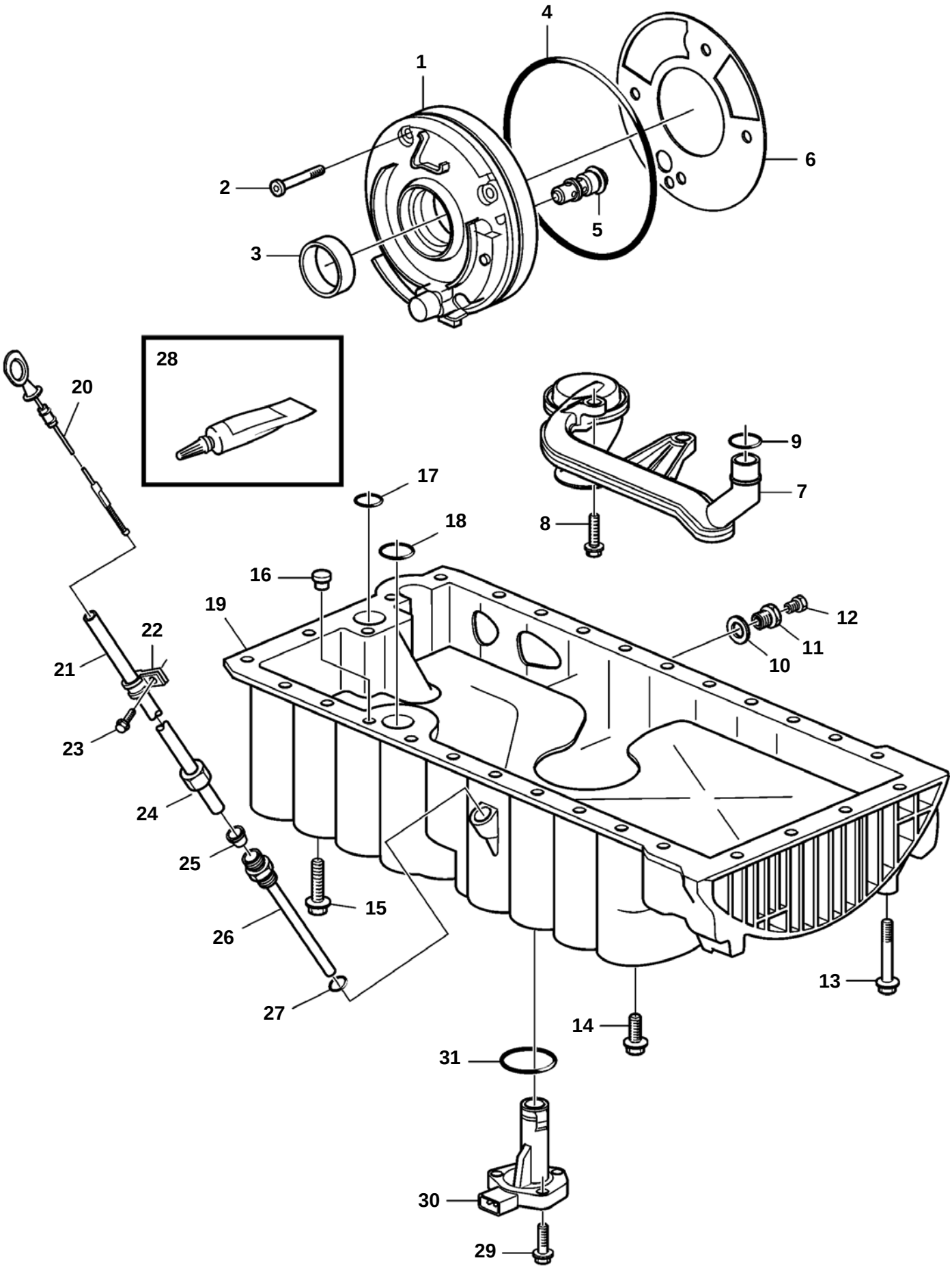

D3-110I-B, D3-110I-C, D3-130A-B, D3-130I-B, D3-130A-C, D3-130I-C, D3-160A-B, D3-160I-B, D3-160A-C, D3-160I-C, D3-190A-B, D3-190I-B, D3-190A-C, D3-190I-C

REF	PART NO.	QTY	DESCRIPTION	NOTES
1	30637377		Oil pump	SN-334746
	30777092		Oil pump	SN334747-
2	980880	4	6 point socket screw	
3	6842273	1	Sealing ring	
4	981204	1	O-ring	
5	30677893	1	Piston cooling valve	SN-350113
	30750943	1	Piston cooling valve	SN350114-
6	1275404	1	Gasket	
7	30650552	1	Oil suction pipe	
8	968158	2	Screw	
9	30637867	1	O-ring	
10	11998	1	Gasket	For servo pump.
11	3588129	1	Plug	For servo pump.
12		1	Screw	For servo pump.
13	980092	4	Flange screw	
14	975880	22	Flange screw	
15	985322	3	Screw	
16	463963	1	Valve	
17	8642560	1	Sealing ring	
18	8631513	1	Sealing ring	
19	8670460	1	Oil pan	SN-334746
	30713677	1	Oil pan	SN334747-
20	3883471	1	Oil dipstick	
21	3883490	1	Tube	
22	952627	1	Clamp	
23	946544	1	Flange screw	
24	956984	1	Nut	
25	980782	1	Ferrule	
26	3588212	1	Suction pipe	
27	958226	1	O-ring	
28	1161059	1	Sealant	50ml
29	947542	3	Screw	
30	30750939	1	Sender	
31	8675328	1	O-ring	

D3-110I-A, D3-130A-A, D3-130I-A, D3-160A-A, D3-160I-A

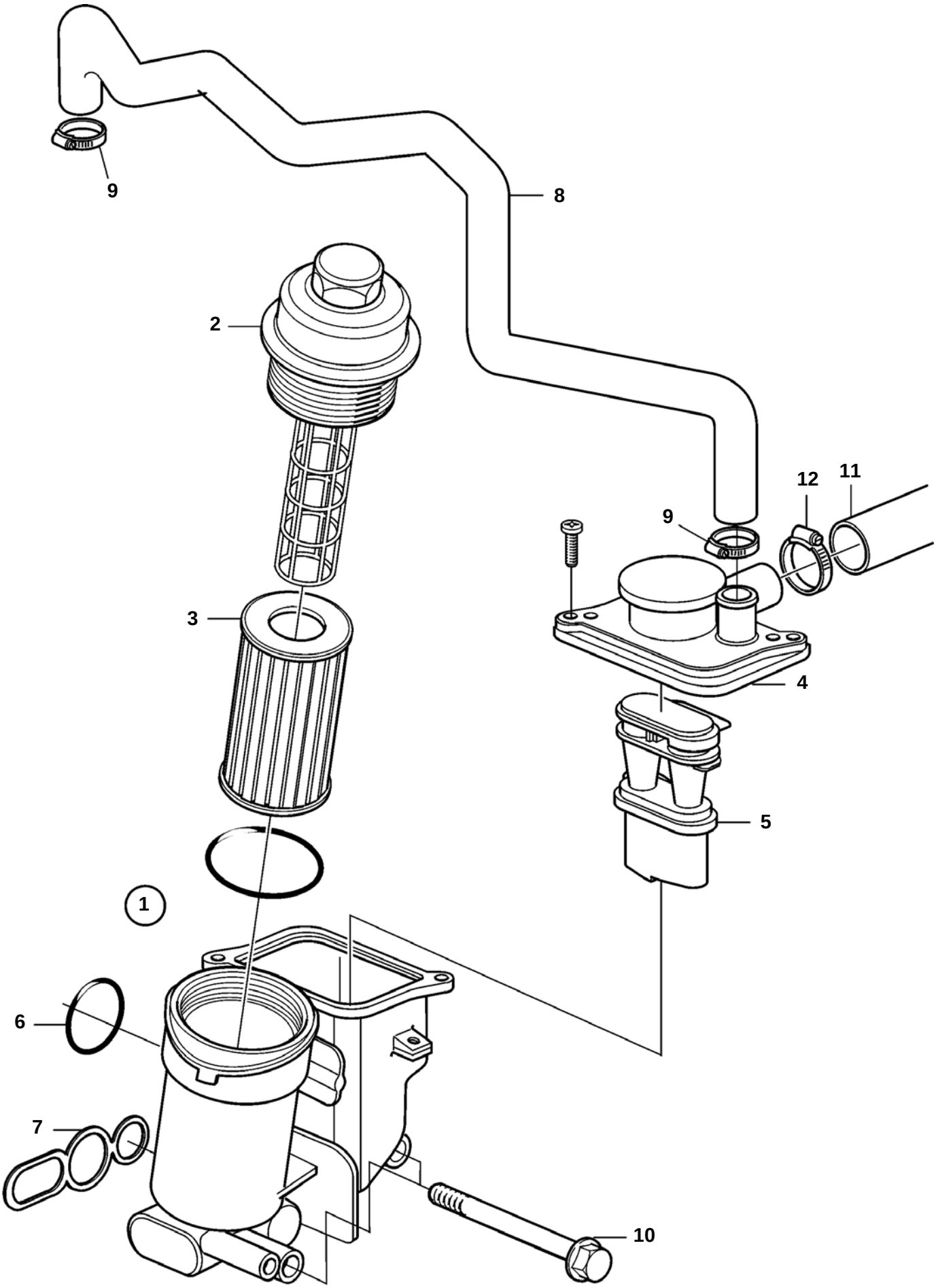

D3-110I-A, D3-130A-A, D3-130I-A, D3-160A-A, D3-160I-A

REF	PART NO.	QTY	DESCRIPTION	NOTES
1	30677920	1	Oil filter housing	(8642839)
2	8692306	1	· Cover	(8692304)
3	8692305	1	· Oil filter insert	
4	8642424	1	· Valve	
5	8642426	1	· Oil separator	Replaced by 30677920, Oil filter house.
6	8642828	1	· Seal	
7	8642421	1	· Seal	
8	8692241	1	Hose	
9	976561	2	Hose clamp	
10	968167	4	Flange screw	
11	3586800	1	Hose, crankcase vent.	
12	943473	2	Hose clamp	

D3-110I-B, D3-110I-C, D3-130A-B, D3-130I-B, D3-130A-C, D3-130I-C, D3-160A-B, D3-160I-B, D3-160A-C, D3-160I-C, D3-190A-B, D3-190I-B, D3-190A-C, D3-190I-C

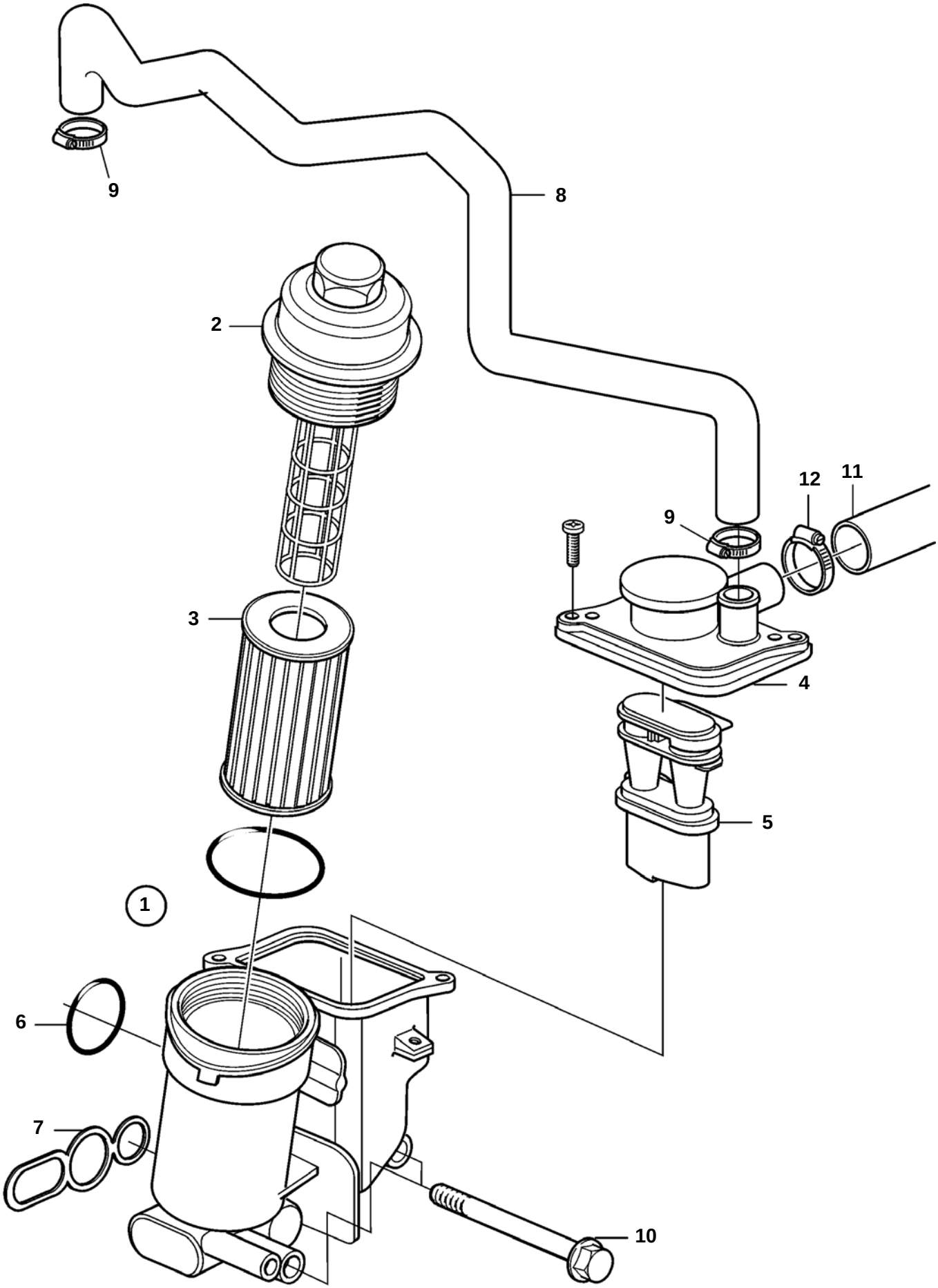

D3-110I-B, D3-110I-C, D3-130A-B, D3-130I-B, D3-130A-C, D3-130I-C, D3-160A-B, D3-160I-B, D3-160A-C, D3-160I-C, D3-190A-B, D3-190I-B, D3-190A-C, D3-190I-C

REF	PART NO.	QTY	DESCRIPTION	NOTES
1	30677920	1	Oil filter housing	
2	8692306	1	· Cover	
3	8692305	1	· Oil filter insert	
4	8642424	1	· Valve	
5		1	· Oil separator	Order 30677920, Oil filter house.
6	8642828	1	· Seal	
7	8642421	1	· Seal	
8	8653562	1	Hose	
9	976561	2	Hose clamp	
10	968167	4	Flange screw	
11	3817387	1	Hose, crankcase vent.	
12	943473	2	Hose clamp	

D3-110I-A, D3-130A-A, D3-130I-A, D3-160A-A, D3-160I-A

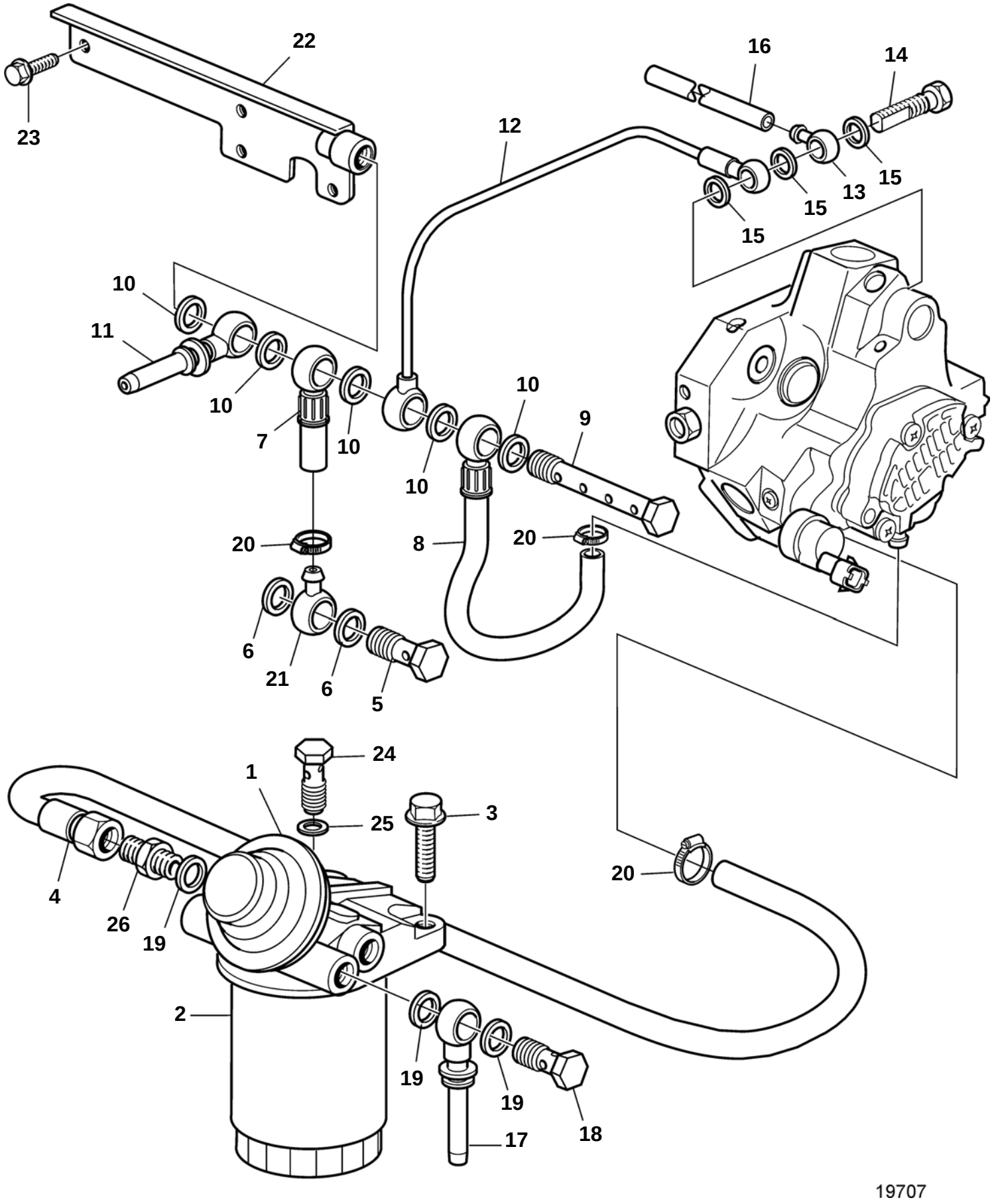

D3-110I-A, D3-130A-A, D3-130I-A, D3-160A-A, D3-160I-A

REF	PART NO.	QTY	DESCRIPTION	NOTES
1	3586804	1	Fuel filter housing	
2	3840335	1	Fuel filter kit	(8683212)
3	946472	2	Screw	
4	3584300	1	Fuel hose	
5	974678	1	Hollow screw	
6	11996	1	Gasket	
7	3584309	1	Hose	
8	3584341	1	Fuel hose	
9	3584469	1	Hollow screw	
10	969011	5	Gasket	
11	3587322	1	Nipple	
12	3587321	1	Fuel pipe	
13	8642836	1	Nipple	
14	3580939	1	Hollow screw	
15	11991	3	Seal	
16	3584310	1	Hose	
17	3587322	1	Nipple	
18	25167	1	Hollow screw	
19	969011	3	Gasket	
20	943470	4	Hose clamp	
21	8667542	1	Nipple	
22	889511	1	Bracket	
23		2	Screw	
24	3589276	1	Screw	
25	11991	1	Seal	
26	941754	1	Nipple	

D3-110I-B, D3-110I-C, D3-130A-B, D3-130I-B, D3-130A-C, D3-130I-C, D3-160A-B, D3-160I-B, D3-160A-C, D3-160I-C, D3-190A-B, D3-190I-B, D3-190A-C, D3-190I-C

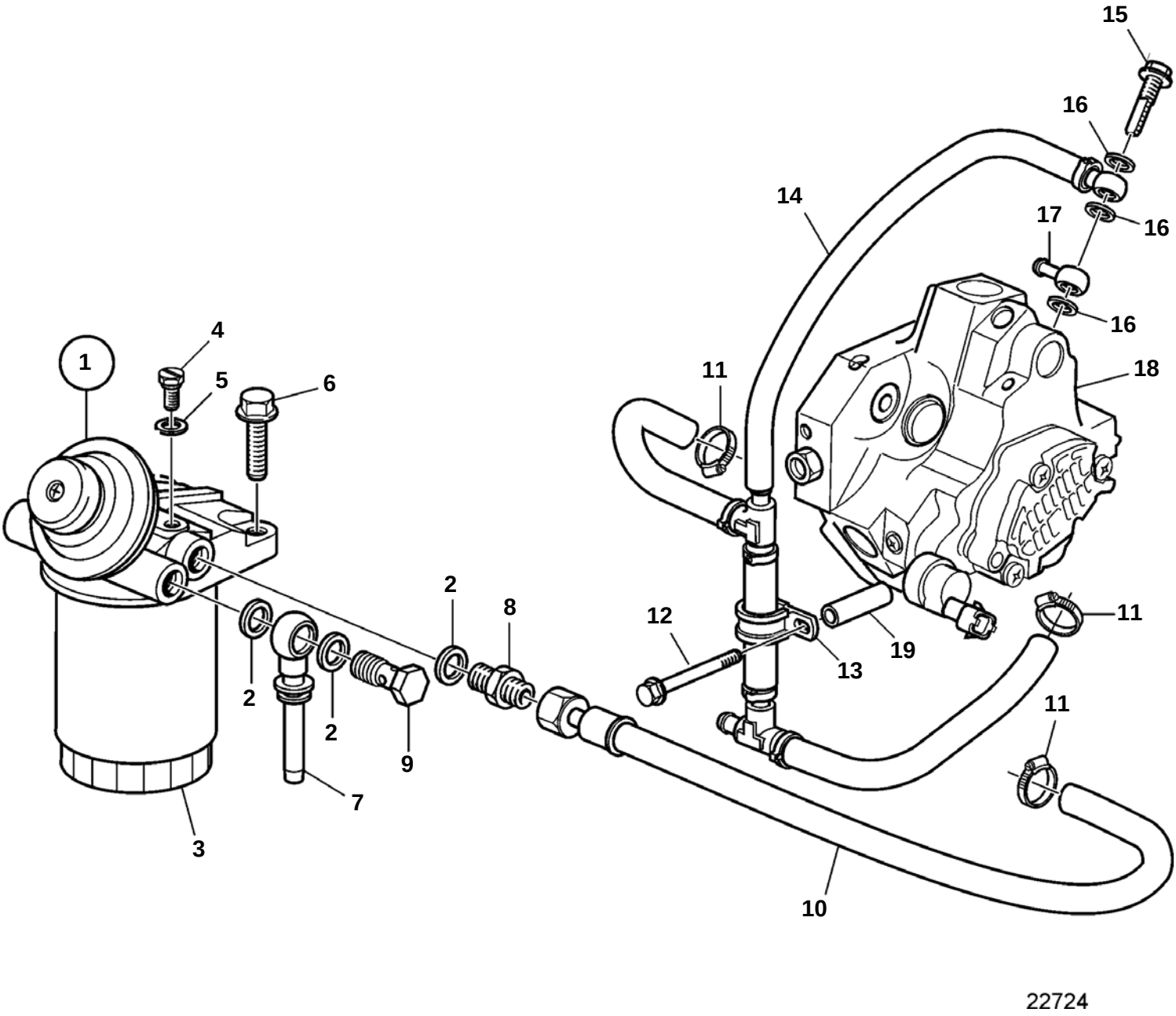

D3-110I-B, D3-110I-C, D3-130A-B, D3-130I-B, D3-130A-C, D3-130I-C, D3-160A-B, D3-160I-B, D3-160A-C, D3-160I-C, D3-190A-B, D3-190I-B, D3-190A-C, D3-190I-C

REF	PART NO.	QTY	DESCRIPTION
1	3884825	1	Fuel filter kit
2	969011	3	· Gasket
3	3840335	1	Fuel filter kit
4	3589276	1	Screw
5	11991	1	Seal
6	946472	1	Screw
7	3587322	1	Nipple
8	941754	1	Nipple
9	25167	1	Hollow screw
10	3812630	1	Hose
11	961663	3	Clamp
12	946544	1	Flange screw
13	980614	1	Clamp
14	3843279	1	Fuel hose
15	3580939	1	Hollow screw
16	981183	3	Gasket
17	3842375	1	Banjo nipple
18	3803910	1	H.pressure pump,exch
19	846425	1	Spacer sleeve

D3-110I-A, D3-130A-A, D3-130I-A, D3-160A-A, D3-160I-A

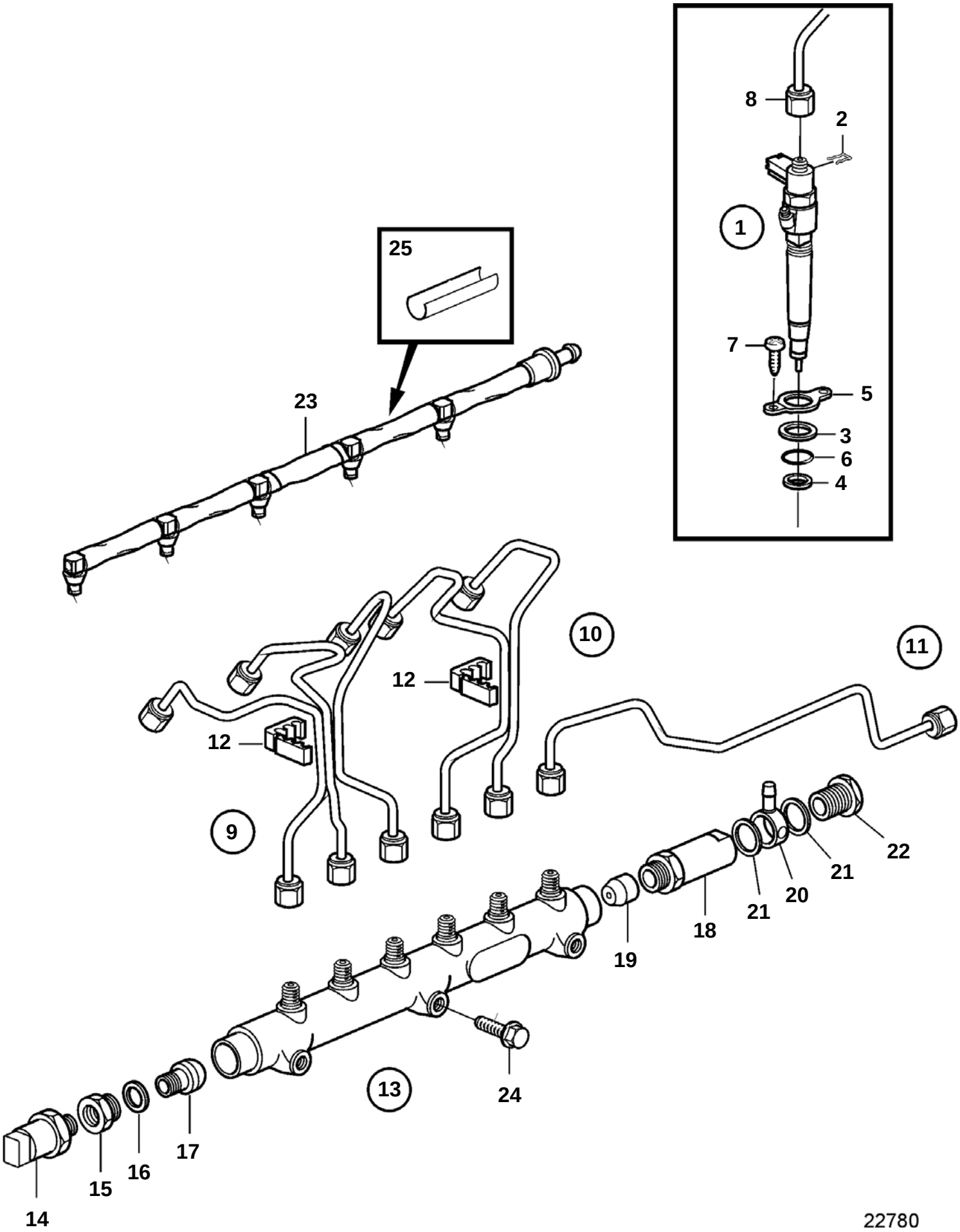

D3-110I-A, D3-130A-A, D3-130I-A, D3-160A-A, D3-160I-A

REF	PART NO.	QTY	DESCRIPTION	NOTES
1	3803980	1	Injector, exch, cyl 1	When replacing injector also replace the corresponding fuel pipe.
	3803981	1	Injector, exch, cyl 2	When replacing injector also replace the corresponding fuel pipe.
	3801154	1	Injector, exch, cyl 3	When replacing injector also replace the corresponding fuel pipe., (3803982)
	3803983	1	Injector, exch, cyl 4	When replacing injector also replace the corresponding fuel pipe.
	3803984	1	Injector, exch, cyl 5	When replacing injector also replace the corresponding fuel pipe.
2		1	· Clip	
3		1	· Washer	
4		1	· Washer	Included in kit 30650390
5		1	· Retaining clamp	Included in kit 30650390
6		1	· Clip	Included in kit 30650390
7		2	· 6 point socket screw	Included in kit 30650390
8		1	· Fuel pipe	Included in exchange kit for injector.
9	30731826	1	Fuel pipe	Fuel Pipe Cyl. 1-3, Clips 8631597 included., (30677135)
10	30731827	1	Fuel pipe	Fuel Pipe Cyl. 4-5, Clips 8631597 included., (30677136)
11	30731828	1	Fuel pipe	(30677137)
12	8631597	2	Clip	
13	8658252	1	Common rail	(30622085)
14	30637150	1	· Pressure sensor	(30637412)
15	8691159	1	· Adapter	
16	8627837	1	· Gasket	
17	8627834	1	· Adapter	
18	30637151	1	· Safety valve	
19		1	· Adapter	
20	8667542	1	· Nipple	
21	11996	2	· Gasket	
22	974678	1	· Hollow screw	
23	30750957	1	Fuel hose	(8670357)
24	968167	3	Flange screw	
25	3808926	1	Isolator	L=80mm

D3-110I-B, D3-110I-C, D3-130A-B, D3-130I-B, D3-130A-C, D3-130I-C, D3-160A-B, D3-160I-B, D3-160A-C, D3-160I-C, D3-190A-B, D3-190I-B, D3-190A-C, D3-190I-C

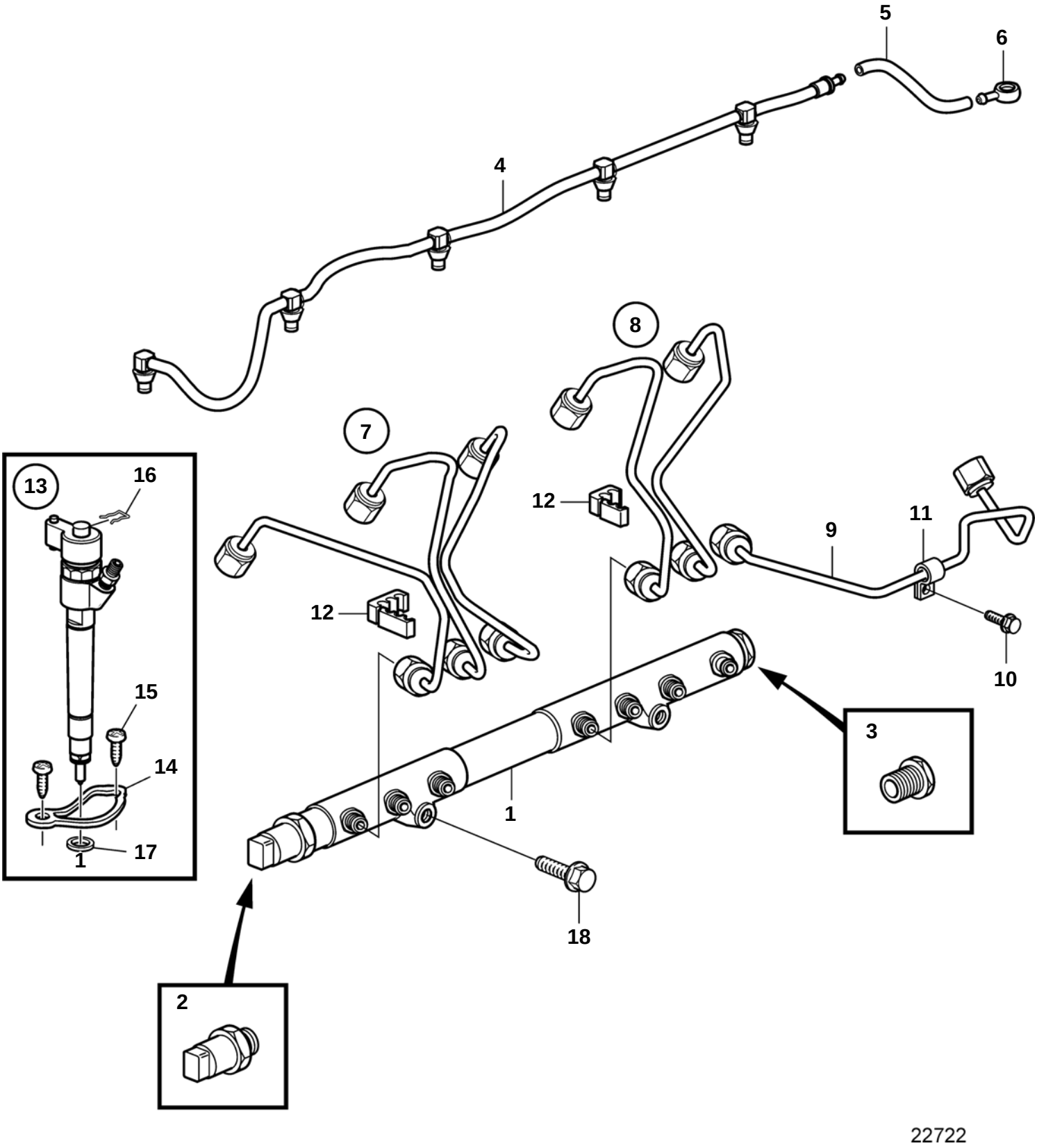

D3-110I-B, D3-110I-C, D3-130A-B, D3-130I-B, D3-130A-C, D3-130I-C, D3-160A-B, D3-160I-B, D3-160A-C, D3-160I-C, D3-190A-B, D3-190I-B, D3-190A-C, D3-190I-C

REF	PART NO.	QTY	DESCRIPTION	NOTES
1	3809500	1	Common rail	
2	3884352	1	· Pressure sensor	Delivered with grease and installation instruction.
3	3884353	1	· Valve	Delivered with grease and installation instruction.
4	30750957	1	Fuel hose	(8670357)
5	3584310	1	Hose	
6	3842375	1	Banjo nipple	
7	30777506	1	Delivery pipe	Fuel Pipe Cyl. 1-3, (30757442)
8	30777507	1	Delivery pipe	(30757443), Fuel Pipe Cyl. 4-5
9	30777508	1	Delivery pipe	(30757444)
10	946934	1	Flange screw	
11	952623	1	Clamp	
12		2	Clip	
13	3803985	5	Injector, exch	When replacing injector also replace the corresponding fuel pipe.
14	8687924	1	· Retaining clamp	
15	987494	2	· Flange screw	
16	8627730	1	· Clip	
17	8631582	5	Washer	
18	973924	2	Flange screw	

D3-110I-A, D3-130A-A, D3-130I-A, D3-160A-A, D3-160I-A

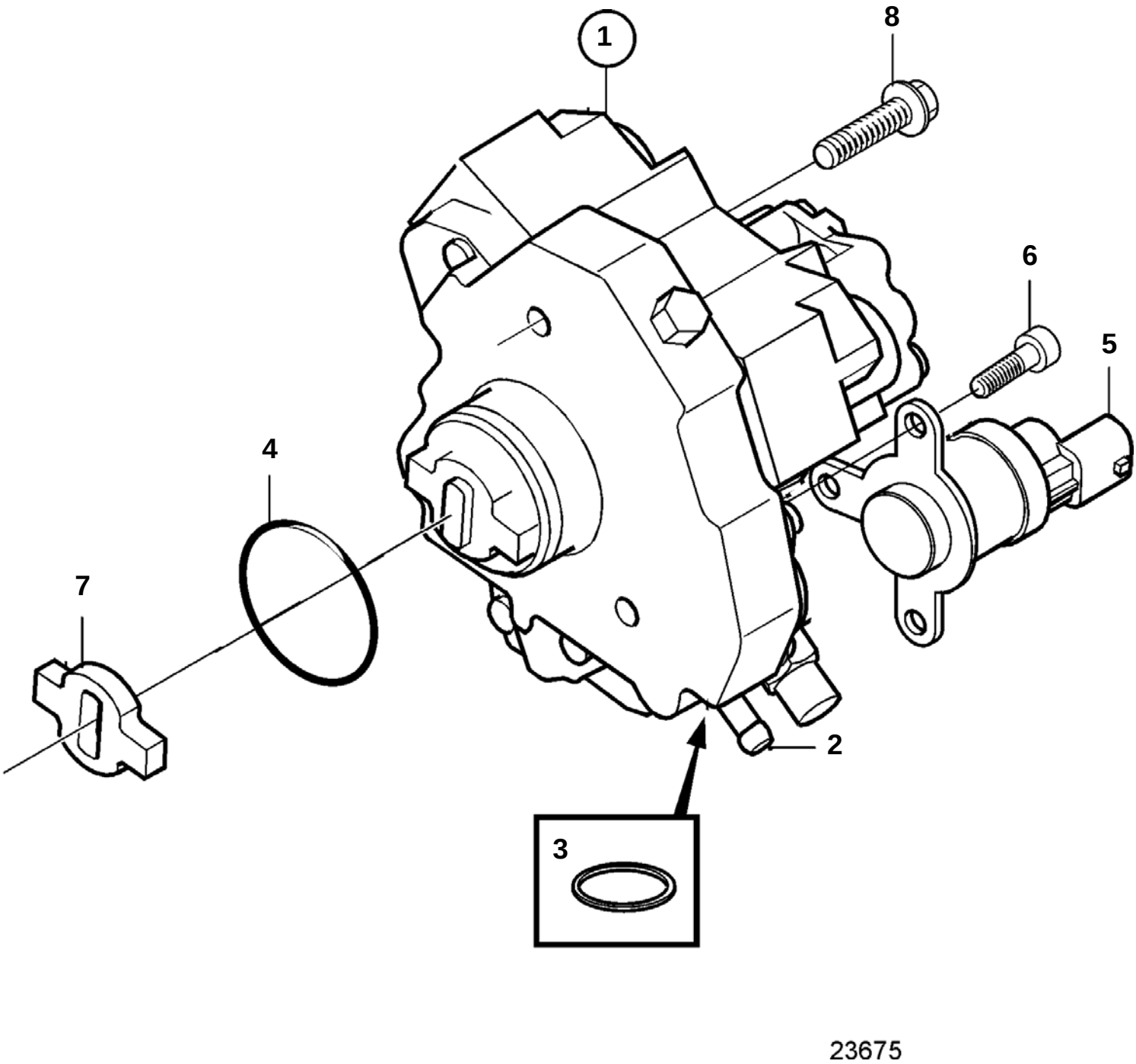

D3-110I-A, D3-130A-A, D3-130I-A, D3-160A-A, D3-160I-A

REF	PART NO.	QTY	DESCRIPTION	NOTES
1	3803907	1	H.pressure pump,exch	(3803644)
2	30731749	2	· Nipple	(8642459)
3	947282	2	· Gasket	(8653378)
4	8631580	1	· O-ring	
5	30731748	1	· Solenoid valve	
6	8692268	3	· Screw	
7	8627612	1	Connection block	For cam shaft 8658358 and 30731214
	8653606	1	Connection block	For cam shaft 8699506 and 30677509
8	983046	3	Flange screw	

D3-110I-B, D3-110I-C, D3-130A-B, D3-130I-B, D3-130A-C, D3-130I-C, D3-160A-B, D3-160I-B, D3-160A-C, D3-160I-C, D3-190A-B, D3-190I-B, D3-190A-C, D3-190I-C

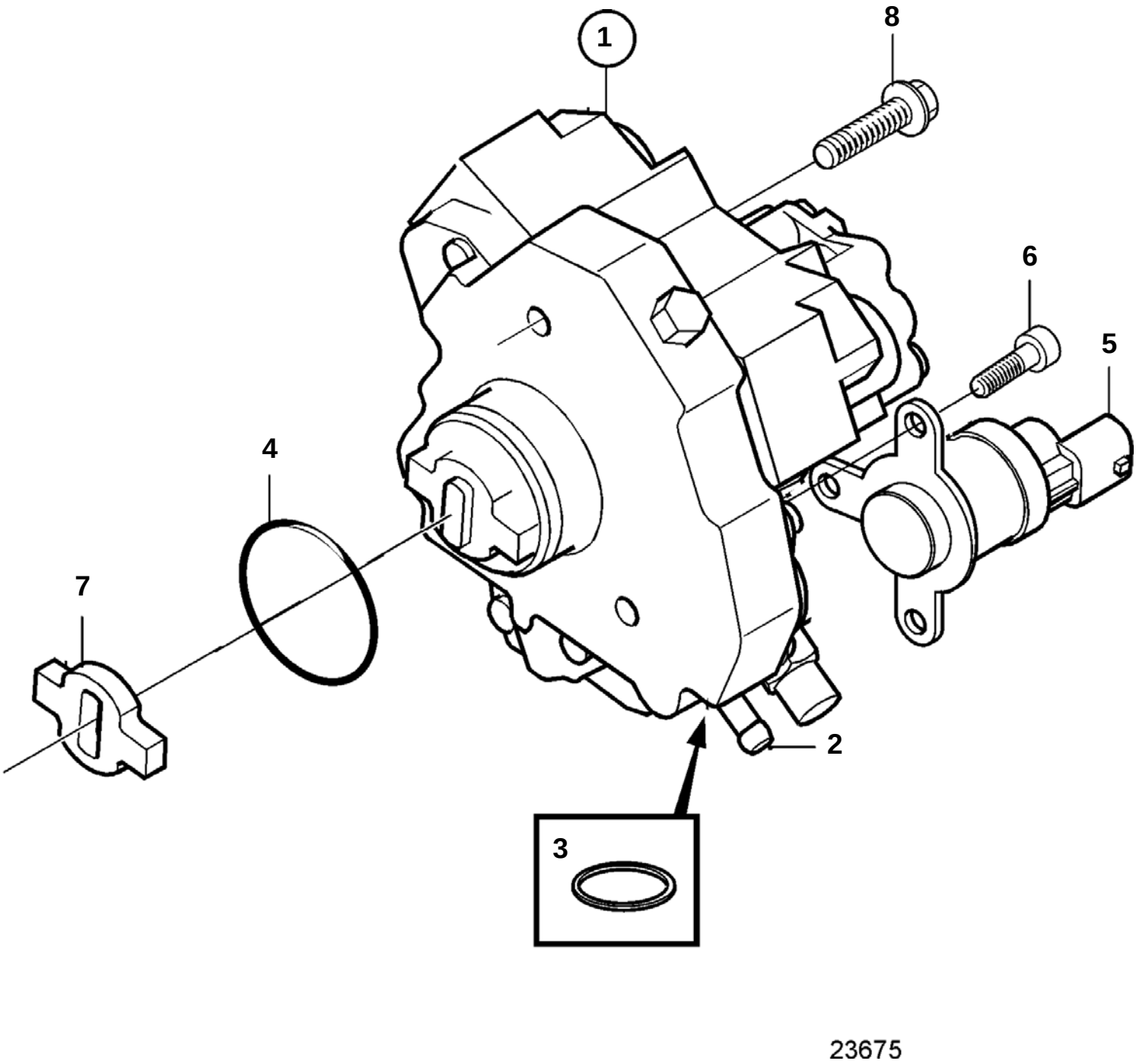

D3-110I-B, D3-110I-C, D3-130A-B, D3-130I-B, D3-130A-C, D3-130I-C, D3-160A-B, D3-160I-B, D3-160A-C, D3-160I-C, D3-190A-B, D3-190I-B, D3-190A-C, D3-190I-C

REF	PART NO.	QTY	DESCRIPTION	NOTES
1	3803910	1	H.pressure pump,exch	
2	30731749	2	· Nipple	(8642459)
3	947282	2	· Gasket	(8653378)
4	8631580	1	· O-ring	
5	30731748	1	· Solenoid valve	
6	8692268	3	· Screw	
7	8653606	1	Connection block	For cam shaft 8699506 and 30677509
8	983046	3	Flange screw	

D3-110I-A, D3-110I-B, D3-110I-C, D3-130A-A, D3-130I-A, D3-130A-B, D3-130I-B, D3-130A-C, D3-130I-C, D3-160A-A, D3-160I-A, D3-160A-B, D3-160I-B, D3-160A-C, D3-160I-C, D3-190A-B, D3-190I-B, D3-190A-C, D3-190I-C

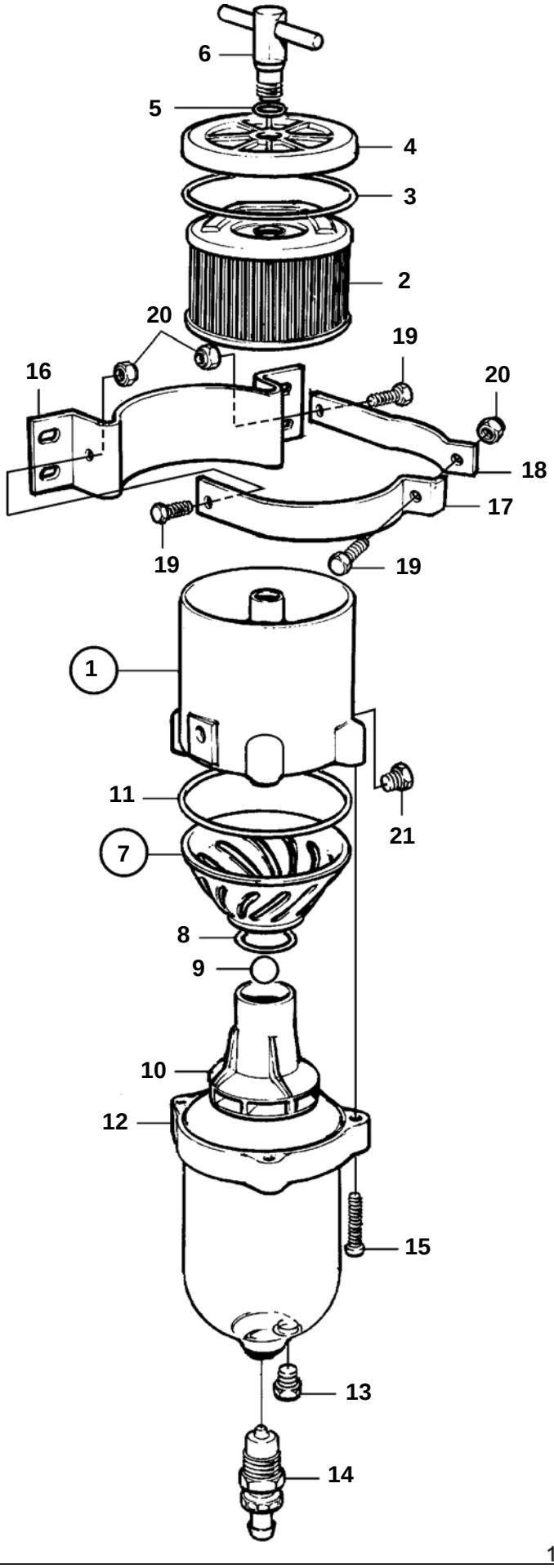

D3-110I-A, D3-110I-B, D3-110I-C, D3-130A-A, D3-130I-A, D3-130A-B, D3-130I-B, D3-130A-C, D3-130I-C, D3-160A-A, D3-160I-A, D3-160A-B, D3-160I-B, D3-160A-C, D3-160I-C, D3-190A-B, D3-190I-B, D3-190A-C, D3-190I-C

REF	PART NO.	QTY	DESCRIPTION	SEE SEC.	NOTES
1	3582350	1	Fuel filter		
			· Bulletin 50-11A	50-11A-EN	Fuel Filters / Water Separators
2	861014	1	· Fuel filter insert		
3	838504	1	· Gasket		
4		1	· Cover		
5	838505	1	· O-ring		
6		1	· Knob		
7	861455	1	· Strainer		
8		1	· · O-ring		
9		1	· · Ball		
10		1	· · Insert		
11	838502	1	· · O-ring		
12	861453	1	· Bowl		
13		1	· Plug		
14	861456	1	· Tap		
15	950024	4	· Screw		
16		1	· Bracket		
17		1	· Clamp		
18		1	· Clamp		
19		3	· Screw		
20		3	· Nut		
21		1	· Plug		

D3-110I-A, D3-110I-B, D3-110I-C, D3-130A-A, D3-130I-A, D3-130A-B, D3-130I-B, D3-130A-C, D3-130I-C, D3-160A-A, D3-160I-A, D3-160A-B, D3-160I-B, D3-160A-C, D3-160I-C, D3-190A-B, D3-190I-B, D3-190A-C, D3-190I-C

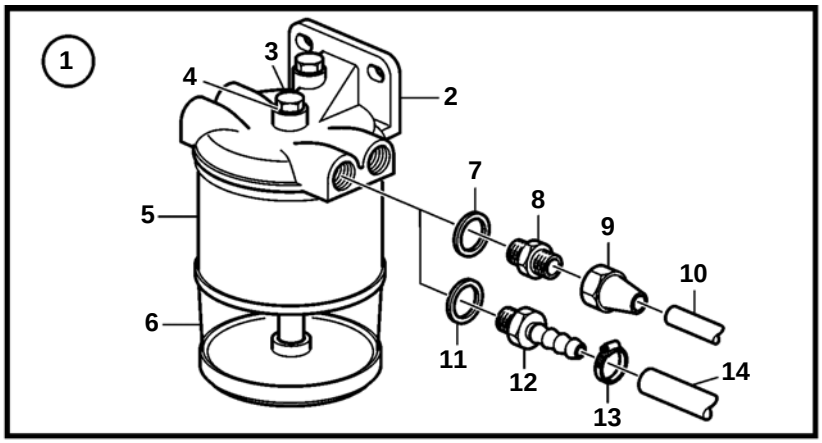

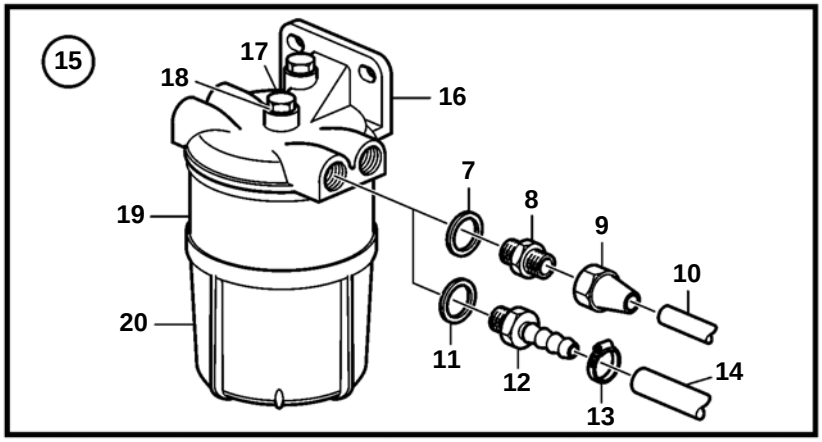

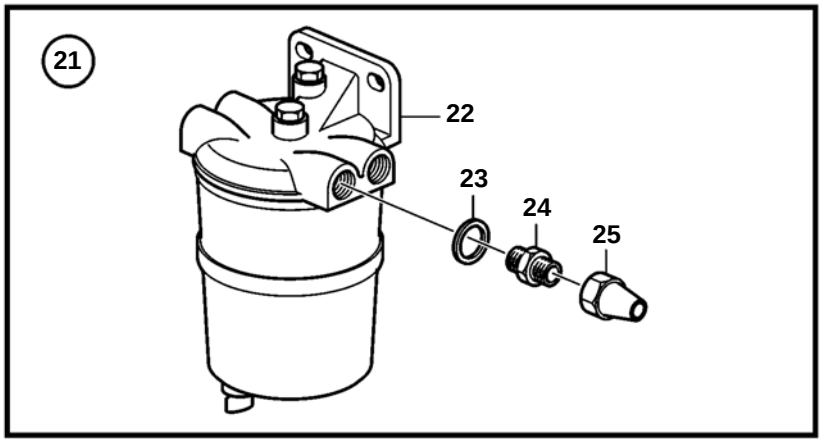

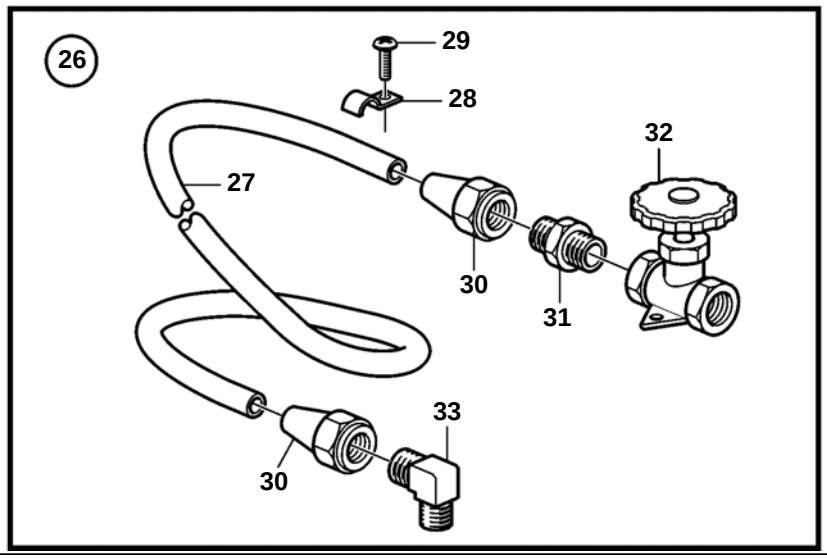

22464

D3-110I-A, D3-110I-B, D3-110I-C, D3-130A-A, D3-130I-A, D3-130A-B, D3-130I-B, D3-130A-C, D3-130I-C, D3-160A-A, D3-160I-A, D3-160A-B, D3-160I-B, D3-160A-C, D3-160I-C, D3-190A-B, D3-190I-B, D3-190A-C, D3-190I-C

REF	PART NO.	QTY	DESCRIPTION	SEE SEC.	NOTES
1	877766	1	Fuel filter kit		Fuel filter and water separator., METAL
2		1	· Fuel filter kit		
			· Bulletin 50-11A	50-11A-EN	Fuel Filters / Water Separators
3	940113	1	· · Screw		
4	11992	1	· · Gasket		
5	3581078	1	· · Fuel filter insert		
6	3582499	1	· · Bowl		
7	18817	2	Gasket		
8	190962	2	Nipple		5/16"
	954337	2	Nipple		3/8"
9	954322	2	Cap nut		5/16"
	954323	2	Cap nut		3/8"
10	954305	X	Copper tube		Water separator., 5/16"
	1140062	X	Copper tube		3/8", Water separator.
11	957177	2	Gasket		
12	3825000	2	Nipple		
13	961664	2	Hose clamp		
14	861057	X	Fuel hose		3/8"
15	877767	1	Fuel filter kit		PLASTIC
16		1	· Fuel filter kit		
17	940113	1	· · Screw		
18	11992	1	· · Gasket		
19	3581078	1	· · Fuel filter insert		
20	3581189	1	· · Bowl		
21	833972	1	Water separator		
22	833971	1	· Water separator		
23	957177	2	· Gasket		
24	191397	2	· Nipple		5/16"
	941438	2	· Nipple		3/8"
25	954322	2	· Cap nut		5/16"
	954323	2	· Cap nut		3/8"
26	827912	1	Fuel line		5/16"
27	954305	1	· Copper tube		5/16", L=5m
28	951189	15	· Clamp		
29	968476	15	· Flange screw		
30	954322	3	· Cap nut		5/16"
31	954336	2	· Nipple		5/16"
32	3581708	1	· Tap		
33	954343	1	· Elbow nipple		

D3-110I-A, D3-110I-B, D3-110I-C, D3-130A-A, D3-130I-A, D3-130A-B, D3-130I-B, D3-130A-C, D3-130I-C, D3-160A-A, D3-160I-A, D3-160A-B, D3-160I-B, D3-160A-C, D3-160I-C, D3-190A-B, D3-190I-B, D3-190A-C, D3-190I-C

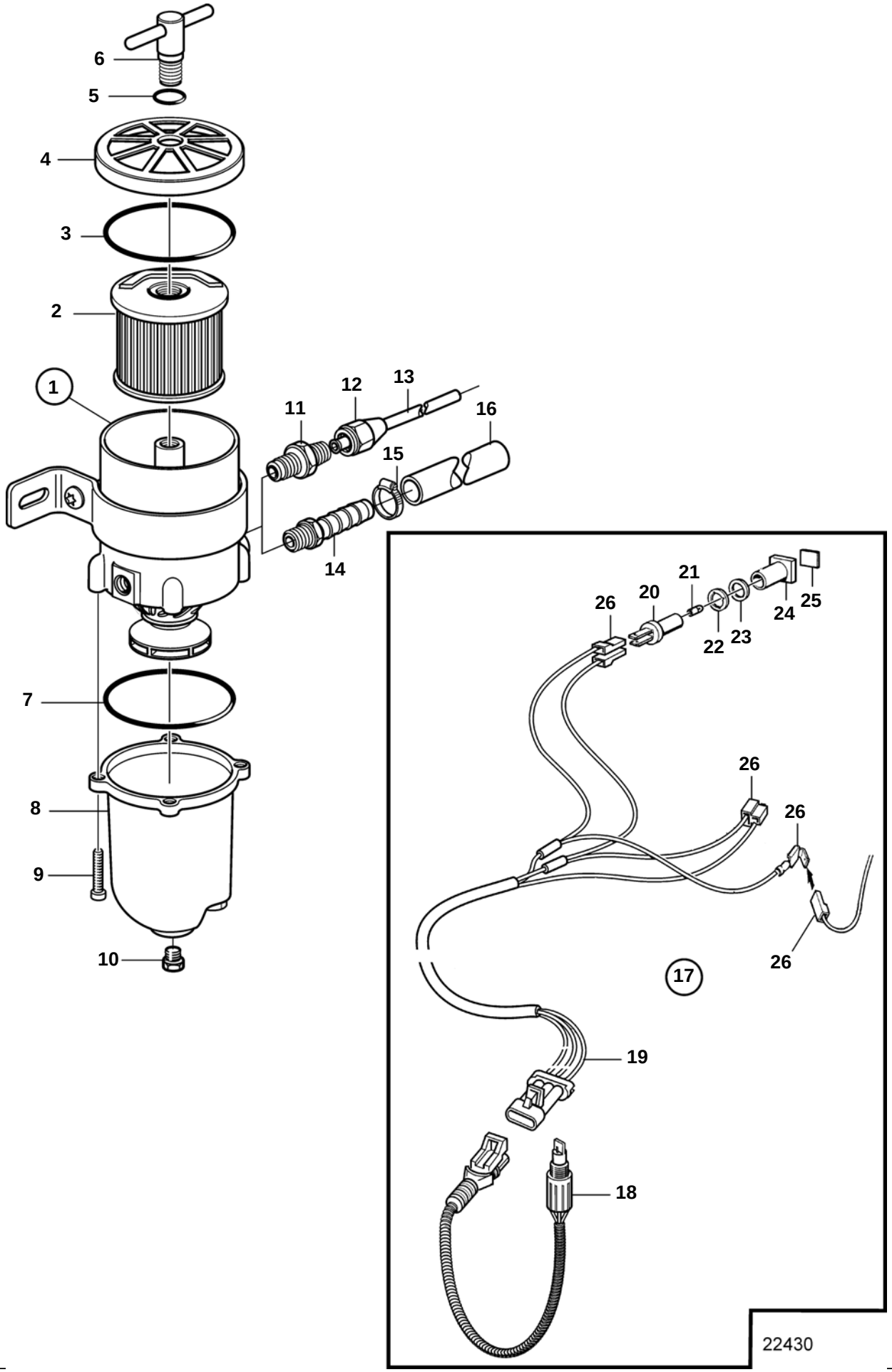

D3-110I-A, D3-110I-B, D3-110I-C, D3-130A-A, D3-130I-A, D3-130A-B, D3-130I-B, D3-130A-C, D3-130I-C, D3-160A-A, D3-160I-A, D3-160A-B, D3-160I-B, D3-160A-C, D3-160I-C, D3-190A-B, D3-190I-B, D3-190A-C, D3-190I-C

REF	PART NO.	QTY	DESCRIPTION	SEE SEC.	NOTES
1	877763	1	Fuel filter kit		
2	1147147	1	· Fuel filter insert		2 MIKRON
	861014	1	· Fuel filter insert		10 MIKRON
	3581760	1	· Fuel filter insert		30 MIKRON
3	838504	1	· Gasket		
4		1	· Cover		
5	838505	1	· O-ring		
6		1	· Knob		
7	3838861	1	· Gasket		
8	3838848	1	· Bowl		
9	950024	4	· Screw		
10	952075	1	· Plug		
11	954337	2	Nipple		
12	954323	2	Cap nut		
13	1140062	2	Copper tube		
14	3825000	2	Nipple		
15	961664	2	Hose clamp		
16	861057	X	Fuel hose		3/8"
17	1140724	1	Level guard		
18	3588916	1	· Sender		
19	881774	1	· Wiring harness		
20	808175	1	· Bulb socket		
21	19923	1	· Bulb		12V, 2W
	182059	1	· Bulb		24V, 3W
22	967583	1	· Retainer		
23	829714	1	· Seal		
24	838455	1	· Retainer		
25	872591	1	· Symbol strip		
26		X	· Cables and terminals	1963	

D3-110I-A, D3-110I-B, D3-110I-C, D3-130A-A, D3-130I-A, D3-130A-B, D3-130I-B, D3-130A-C, D3-130I-C, D3-160A-A, D3-160I-A, D3-160A-B, D3-160I-B, D3-160A-C, D3-160I-C, D3-190A-B, D3-190I-B, D3-190A-C, D3-190I-C

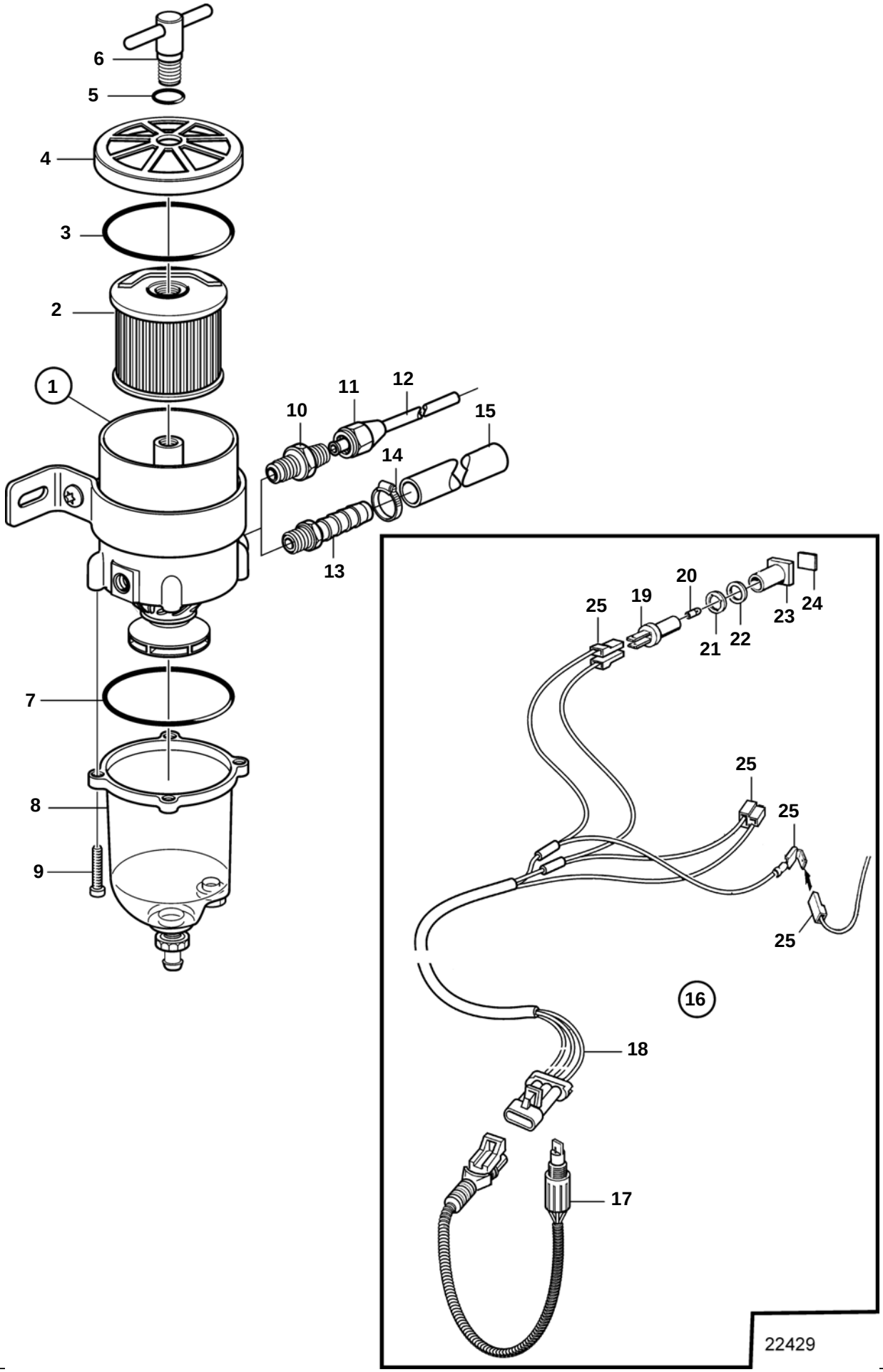

D3-110I-A, D3-110I-B, D3-110I-C, D3-130A-A, D3-130I-A, D3-130A-B, D3-130I-B, D3-130A-C, D3-130I-C, D3-160A-A, D3-160I-A, D3-160A-B, D3-160I-B, D3-160A-C, D3-160I-C, D3-190A-B, D3-190I-B, D3-190A-C, D3-190I-C

REF	PART NO.	QTY	DESCRIPTION	SEE SEC.	NOTES
1	877762	1	Fuel filter kit		REPL. 861143
2	1147147	1	· Fuel filter insert		2 MIKRON
	861014	1	· Fuel filter insert		10 MIKRON
	3581760	1	· Fuel filter insert		30 MIKRON
3	838504	1	· Gasket		
4		1	· Cover		
5	838505	1	· O-ring		
6		1	· Knob		
7	3838861	1	· Gasket		
8	3838848	1	· Bowl		
9	950024	4	· Screw		
10	954337	2	Nipple		
11	954323	2	Cap nut		
12	1140062	2	Copper tube		
13	3825000	2	Nipple		
14	961664	2	Hose clamp		
15	861057	X	Fuel hose		3/8"
16	1140724	1	Level guard		
17	3588916	1	· Sender		
18	881774	1	· Wiring harness		
19	808175	1	· Bulb socket		
20	19923	1	· Bulb		12V, 2W
	182059	1	· Bulb		24V, 3W
21	967583	1	· Retainer		
22	829714	1	· Seal		
23	838455	1	· Retainer		
24	872591	1	· Symbol strip		
25		X	· Cables and terminals	1963	

D3-110I-A, D3-110I-B, D3-110I-C, D3-130A-A, D3-130I-A, D3-130A-B, D3-130I-B, D3-130A-C, D3-130I-C, D3-160A-A, D3-160I-A, D3-160A-B, D3-160I-B, D3-160A-C, D3-160I-C, D3-190A-B, D3-190I-B, D3-190A-C, D3-190I-C

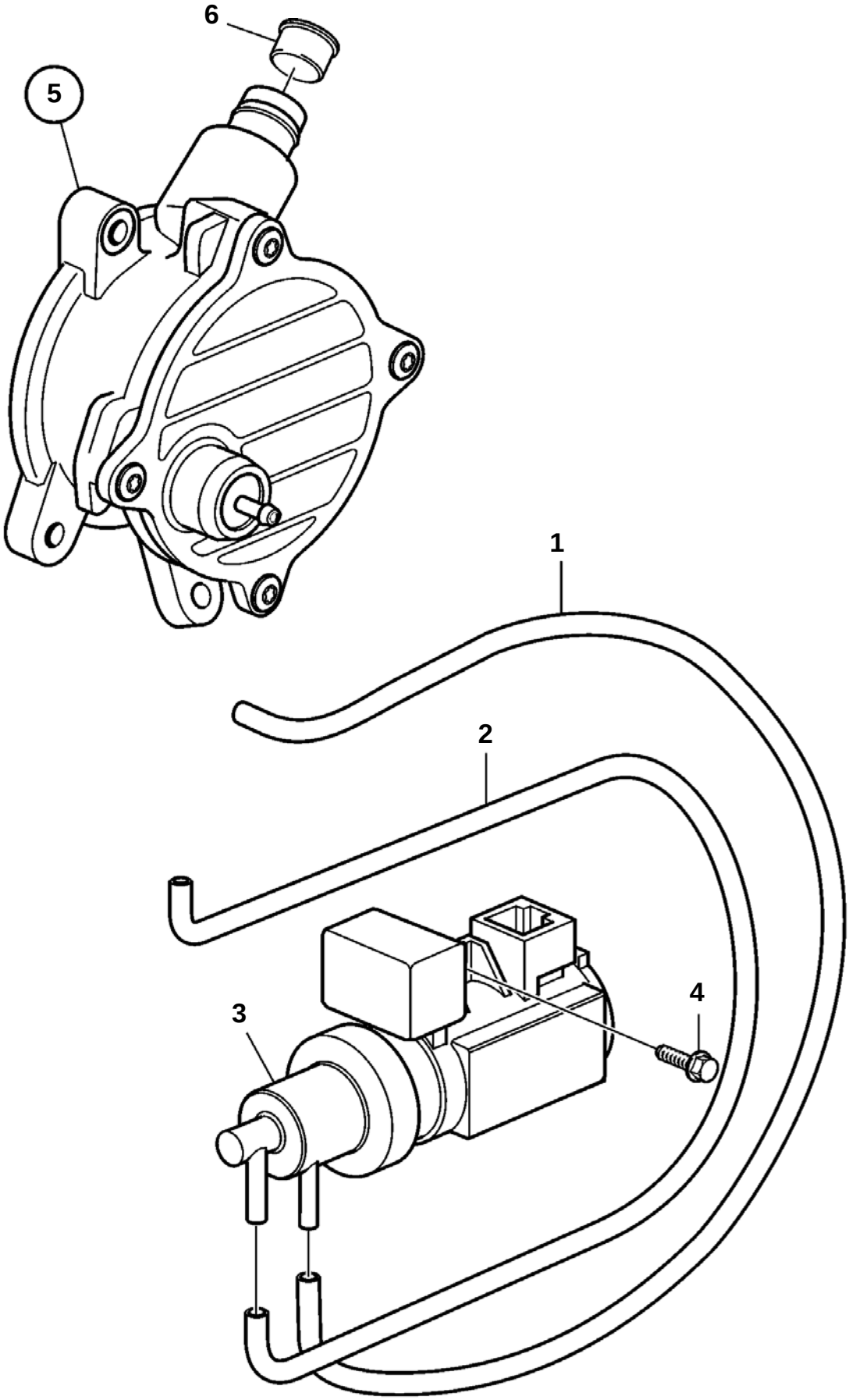

D3-110I-A, D3-110I-B, D3-110I-C, D3-130A-A, D3-130I-A, D3-130A-B, D3-130I-B, D3-130A-C, D3-130I-C, D3-160A-A, D3-160I-A, D3-160A-B, D3-160I-B, D3-160A-C, D3-160I-C, D3-190A-B, D3-190I-B, D3-190A-C, D3-190I-C

REF	PART NO.	QTY	DESCRIPTION
1	8699185	1	Vacuum line, turbo
2	3588247	1	Hose, vacuum pump
3	30637251	1	Regulator
4	982181	2	6 point socket screw
5	3819406	1	Vacuum pump
6	955083	1	· Cap plug

D3-110I-A, D3-130A-A, D3-130I-A, D3-160A-A, D3-160I-A

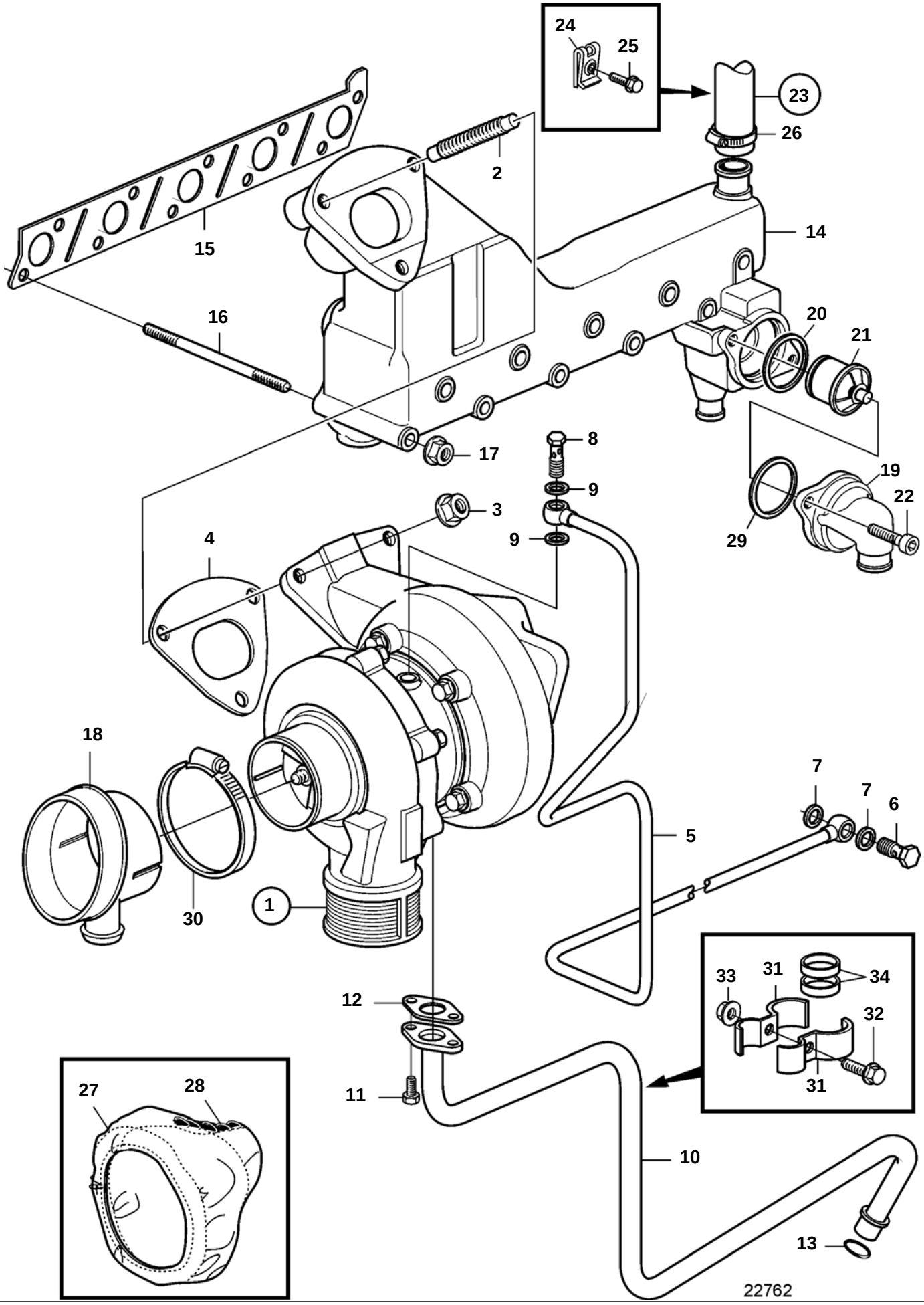

D3-110I-A, D3-130A-A, D3-130I-A, D3-160A-A, D3-160I-A

REF	PART NO.	QTY	DESCRIPTION	NOTES
1	3802145	1	Turbocharger, exch	
2	953045	2	Stud	
3	983048	3	Nut	
4	8631549	1	Gasket	
5	3584290	1	Oil feed pipe	
6	25167	1	Hollow screw	
7	969011	2	Gasket	
8	980973	1	Hollow screw	
9	18665	2	Gasket	
10	3584289	1	Oil return pipe	
11	946544	2	Flange screw	
12	420641	1	Gasket	
13	30637866	1	O-ring	
14	3812601	1	Exhaust manifold	(3584294)
15	30729340	1	Gasket	(8631562)
16	968278	10	Stud	
17	945408	10	Flange nut	
18	3586801	1	Adapter	
19	3584473	1	Cover	
20	3584299	1	Gasket	
21	3840816	1	Thermostat	(3584474)
22	959223	2	Screw	
23	888609	1	Hose	
24	191391	1	· Spring nut	
25	968476	1	· Flange screw	
26	943479	1	Hose clamp	
27	3883211	1	Heat shield	
28	941710	1	Locking wire	L=0,5m
29	3588888	1	O-ring	
30	943479	1	Hose clamp	
31	820851	2	Clamp	
32	946544	2	Flange screw	
33	945407	2	Flange nut	
34	30637866	2	O-ring	

D3-110I-B, D3-110I-C, D3-130A-B, D3-130I-B, D3-130A-C, D3-130I-C, D3-160A-B, D3-160I-B, D3-160A-C, D3-160I-C, D3-190A-B, D3-190I-B, D3-190A-C, D3-190I-C

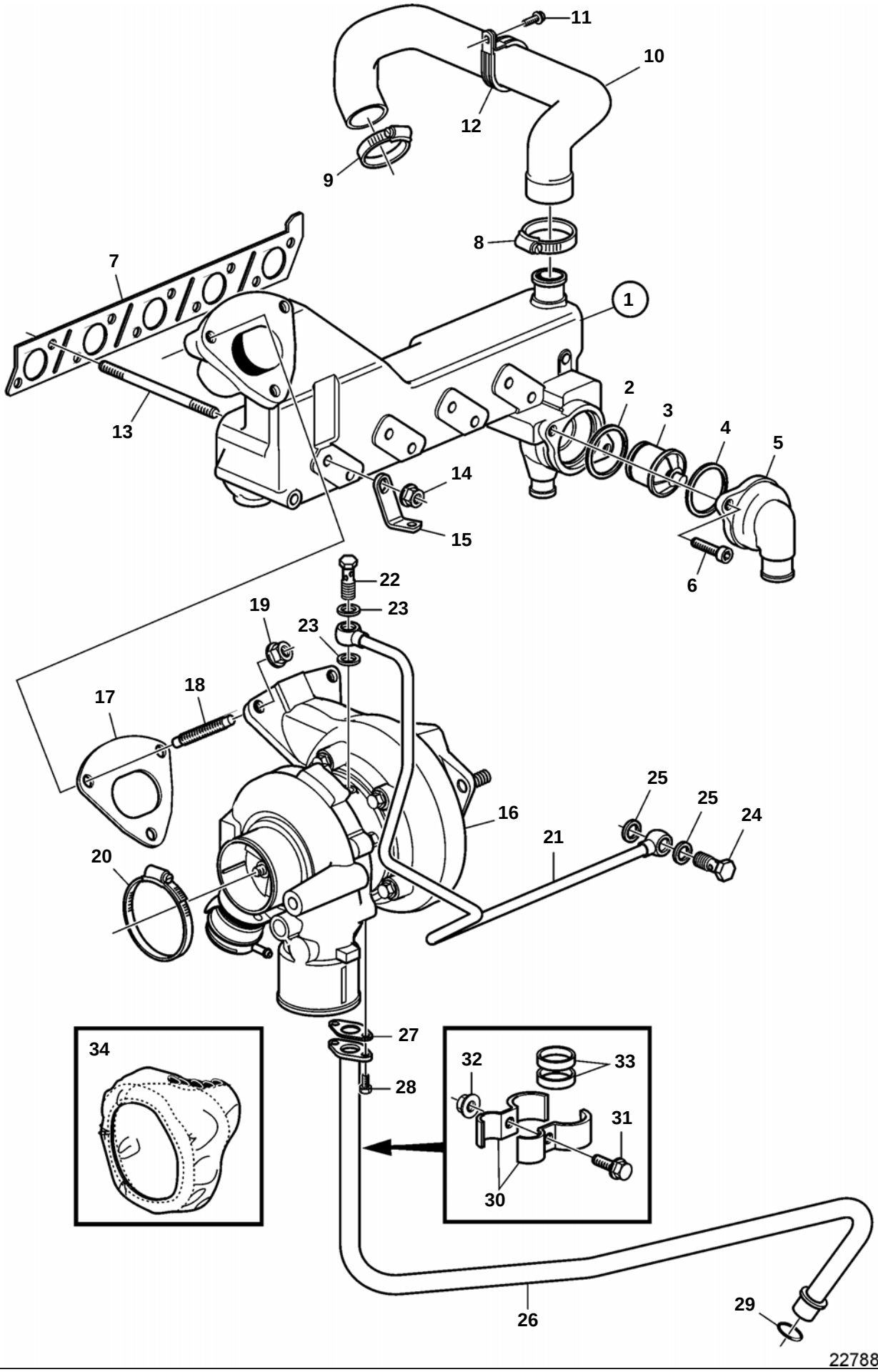

D3-110I-B, D3-110I-C, D3-130A-B, D3-130I-B, D3-130A-C, D3-130I-C, D3-160A-B, D3-160I-B, D3-160A-C, D3-160I-C, D3-190A-B, D3-190I-B, D3-190A-C, D3-190I-C

REF	PART NO.	QTY	DESCRIPTION	NOTES
1	3812601	1	Exhaust manifold	
2	3584299	1	· Gasket	
3	3840816	1	· Thermostat	
4	3588888	1	· O-ring	
5	3584473	1	· Cover	
6	959223	2	· Screw	
7	30729340	1	Gasket	
8	943478	1	Clamp	
9	943477	1	Hose clamp	
10	888609	1	Hose	
11	968476	1	Flange screw	
12	947457	1	Clamp	
13	968278	10	Stud	
14	945408	10	Flange nut	
15	3843670	1	Bracket	
16	3802145	1	Turbocharger, exch	110-160hp
	3802167	1	Turbocharger, exch	190hp
17	8631549	1	Gasket	
18	953045	2	Stud	
19	983048	3	Nut	
20	961672	1	Hose clamp	
21	3841559	1	Oil feed pipe	
22	990807	1	Hollow screw	
23	18665	2	Gasket	
24	25167	1	Hollow screw	
25	969011	2	Gasket	
26	3841558	1	Oil return pipe	
27	3514546	1	Gasket	
28	946544	2	Flange screw	
29	30637866	1	O-ring	
30	820851	2	Clamp	
31	946544	2	Flange screw	
32	945407	2	Flange nut	
33	30637866	2	O-ring	
34	3883211	1	Heat shield	

D3-130A-A, D3-160A-A

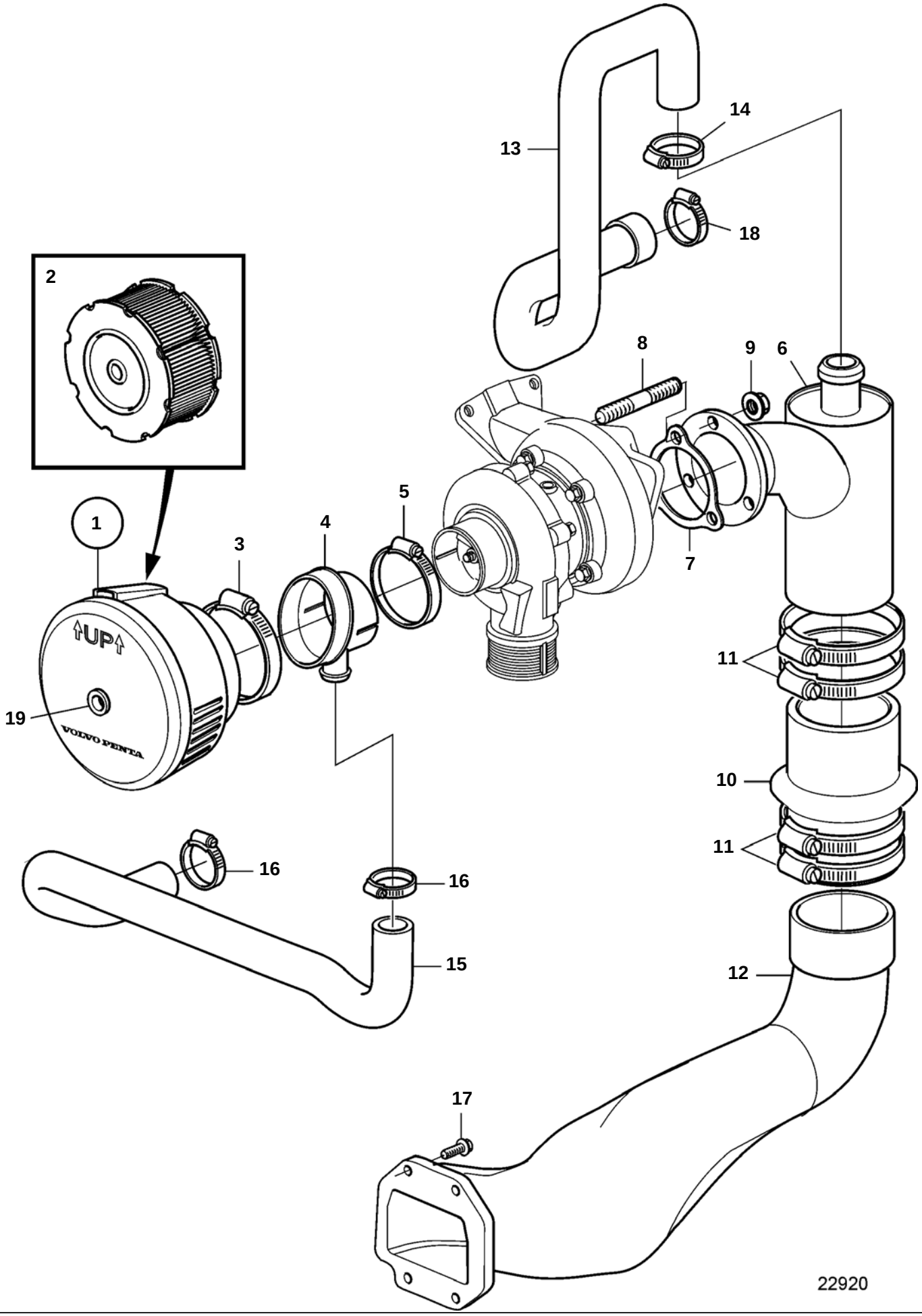

D3-130A-A, D3-160A-A

REF	PART NO.	QTY	DESCRIPTION	SEE SEC.	NOTES
1	3582357	1	Air filter kit		
			· Bulletin 44-47	44-47-EN	New Air Filter for 31, 41 and TAMD42WJ Engines
2	3582358	1	· Air filter insert		
			· Bulletin 44-47	44-47-EN	New Air Filter for 31, 41 and TAMD42WJ Engines
3	943479	1	Hose clamp		
4	3586801	1	Adapter		
5	943479	2	Hose clamp		
6	3809984	1	Exhaust riser		
7	1275549	1	Gasket		
8	982449	3	Stud		
9	981152	3	Flange nut		
10	3863450	1	Bellows		(3852741)
11	853012	4	Hose clamp		
12	3587910	1	Exhaust pipe		
13	3584324	1	Hose		
14	943476	1	Hose clamp		
15	3586800	1	Hose, crankcase vent.		
16	943473	2	Hose clamp		
17	3808880	4	Flange screw		(3855472)
18	943477	1	Hose clamp		
19		1	Plastic plug		

D3-130A-B, D3-160A-B

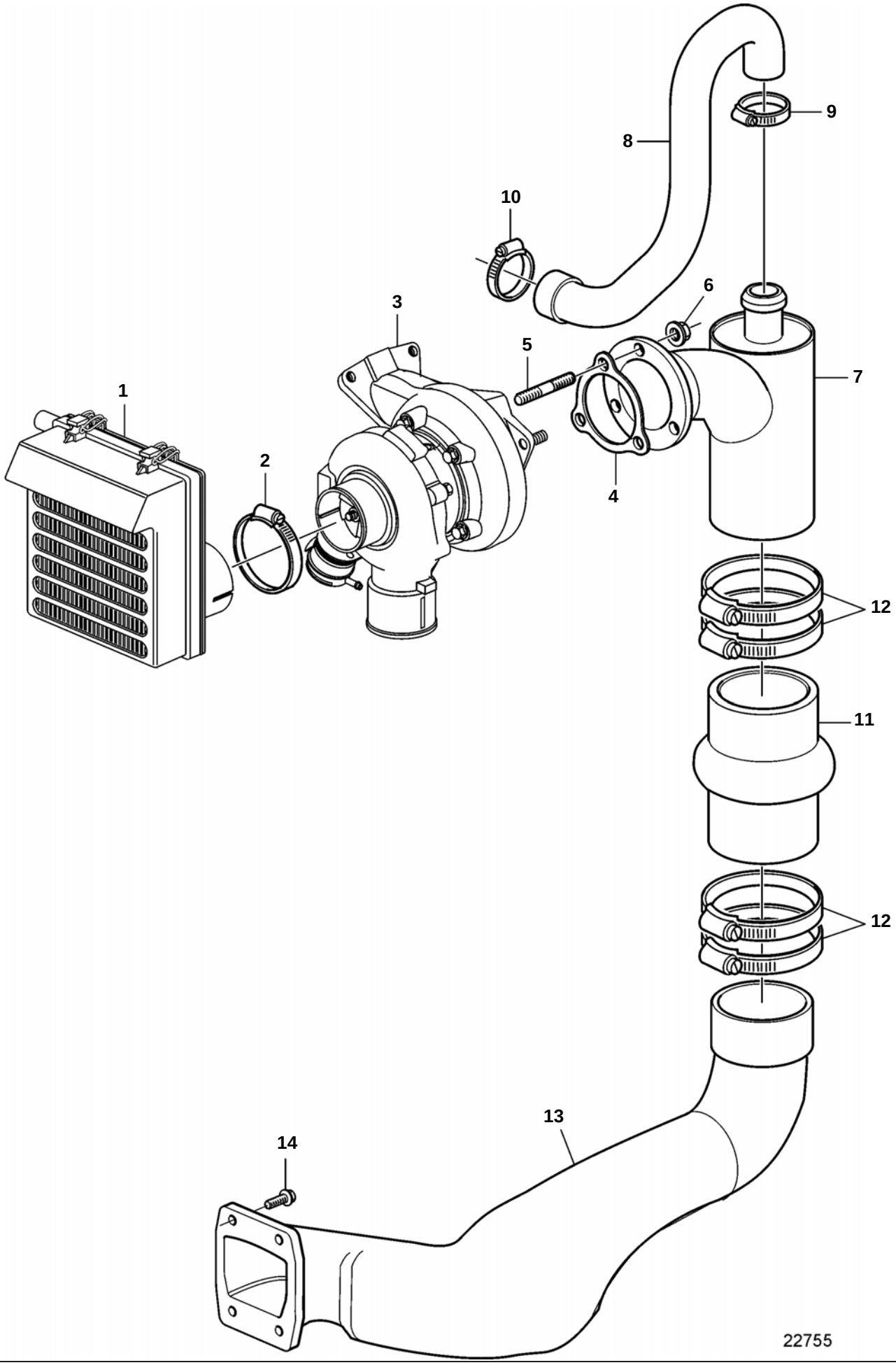

D3-130A-B, D3-160A-B

REF	PART NO.	QTY	DESCRIPTION	SEE SEC.	NOTES
1	3889496	1	Air filter kit	9370	
2	961672	1	Hose clamp		
3	3802145	1	Turbocharger, exch		
4	1275549	1	Gasket		
5	982449	2	Stud		
	991052	1	Stud		For bracket.
6	981152	3	Flange nut		
7	3809984	1	Exhaust riser		
8	3819741	1	Hose		
9	943476	1	Hose clamp		
10	943477	1	Hose clamp		
11	3863450	1	Bellows		
12	853012	4	Hose clamp		
13	3587910	1	Exhaust pipe		
14	3808880	4	Flange screw		(3855472)

D3-130A-C, D3-160A-C

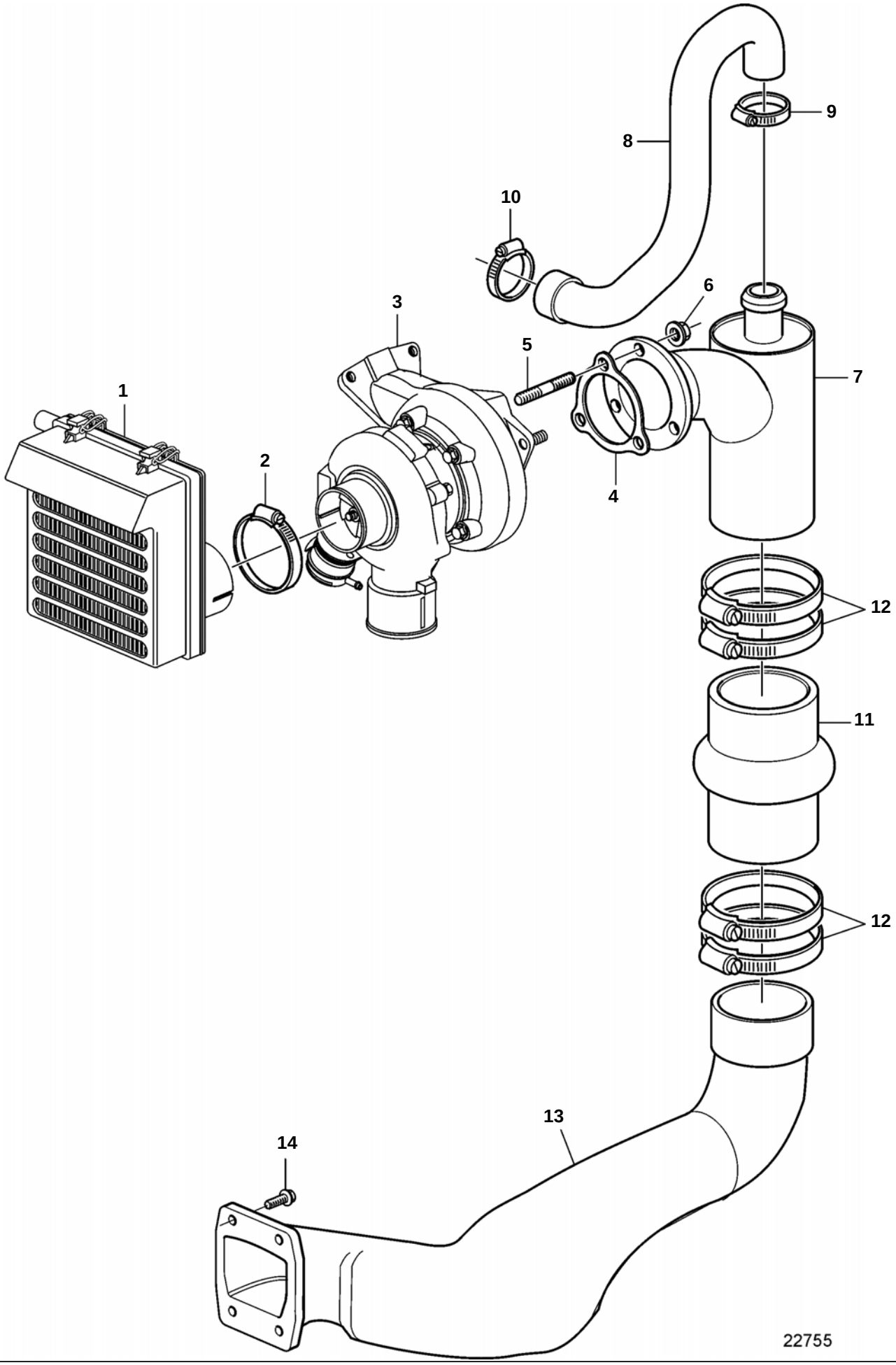

D3-130A-C, D3-160A-C

REF	PART NO.	QTY	DESCRIPTION	SEE SEC.	NOTES
1	3889496	1	Air filter kit	9370	
2	961672	1	Hose clamp		
3	3802145	1	Turbocharger, exch		
4	1275549	1	Gasket		
5	982449	2	Stud		
	991052	1	Stud		For bracket.
6	981152	3	Flange nut		
7	3809984	1	Exhaust riser		
8	3819741	1	Hose		
9	943476	1	Hose clamp		
10	943477	1	Hose clamp		
11	3863450	1	Bellows		
12	853012	4	Hose clamp		
13	3885384	1	Exhaust pipe		
14	3808880	4	Flange screw		(3855472)

D3-190A-B

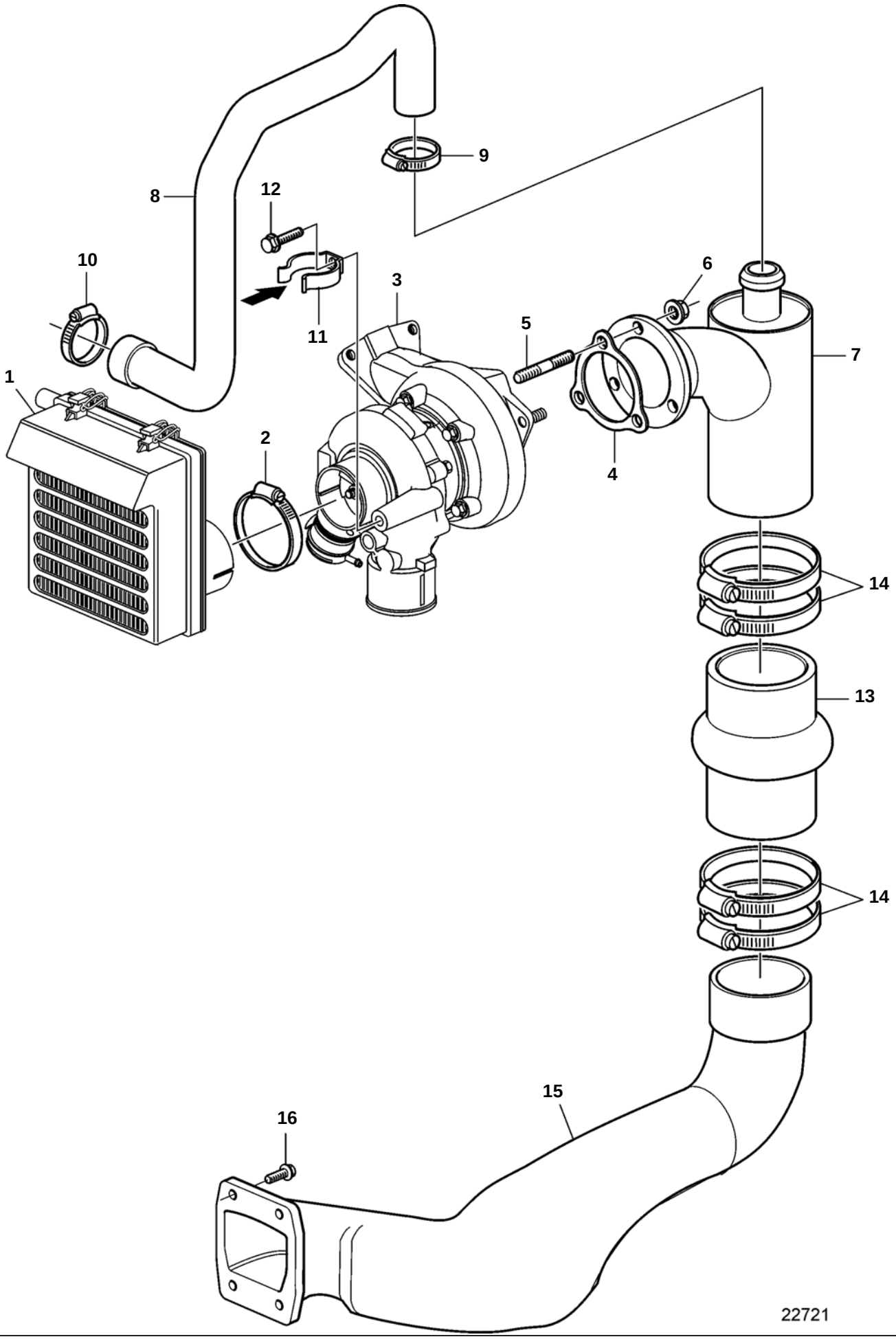

D3-190A-B

REF	PART NO.	QTY	DESCRIPTION	SEE SEC.	NOTES
1	3889496	1	Air filter kit	9370	
2	961672	1	Hose clamp		
3	3802167	1	Turbocharger, exch		
4	1275549	1	Gasket		
5	982449	2	Stud		
	991052	1	Stud		For bracket.
6	981152	3	Flange nut		
7	3809984	1	Exhaust riser		
8	3884397	1	Hose		
9	943476	1	Hose clamp		
10	943477	1	Hose clamp		
11	3843835	1	Clip		
12	941792	1	Screw		
13	3863450	1	Bellows		
14	853012	4	Hose clamp		
15	3587910	1	Exhaust pipe		
16	3808880	4	Flange screw		(3855472)

D3-190A-C

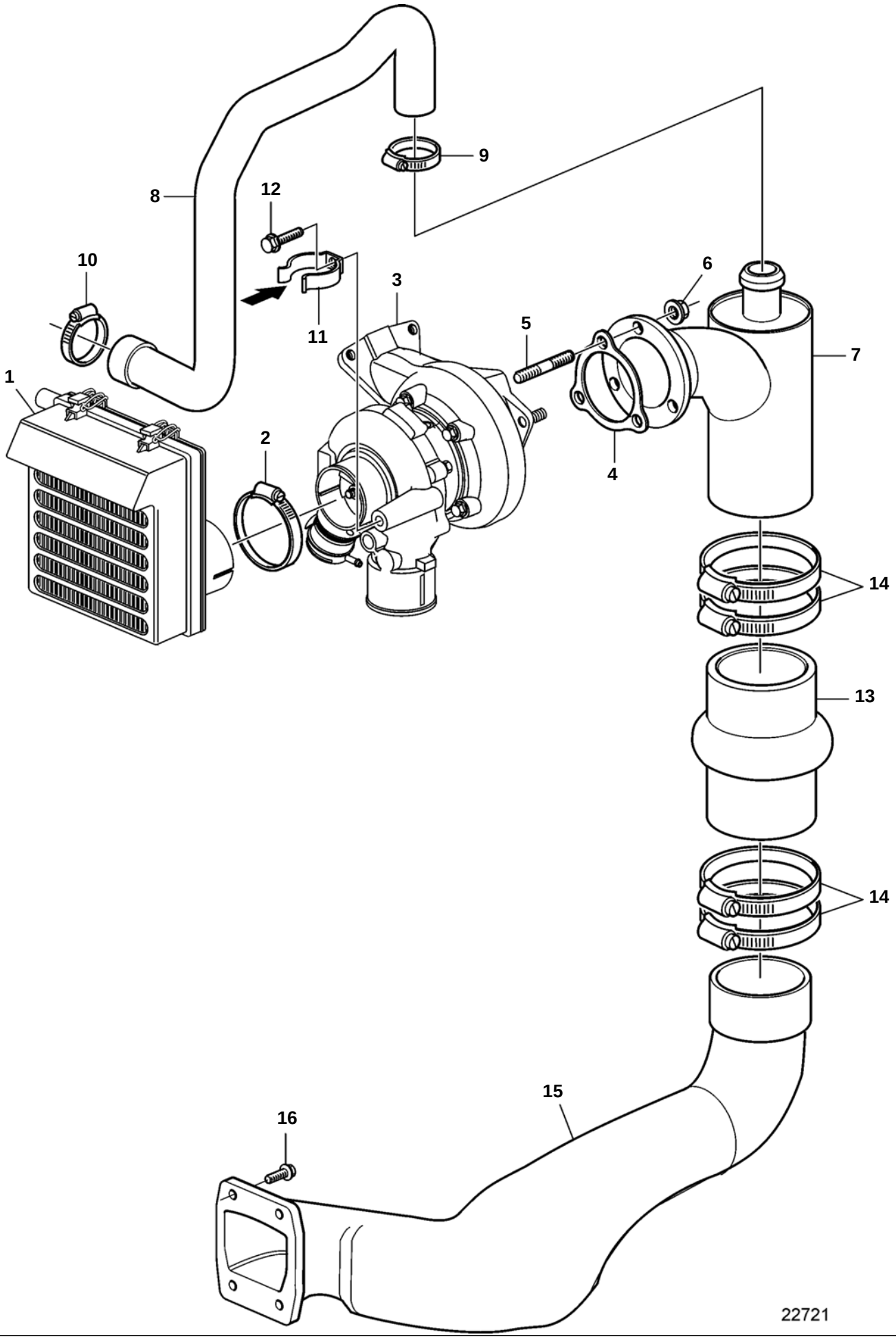

D3-190A-C

REF	PART NO.	QTY	DESCRIPTION	SEE SEC.	NOTES
1	3889496	1	Air filter kit	9370	
2	961672	1	Hose clamp		
3	3802167	1	Turbocharger, exch		
4	1275549	1	Gasket		
5	982449	2	Stud		
	991052	1	Stud		For bracket.
6	981152	3	Flange nut		
7	3809984	1	Exhaust riser		
8	3884397	1	Hose		
9	943476	1	Hose clamp		
10	943477	1	Hose clamp		
11	3843835	1	Clip		
12	941792	1	Screw		
13	3863450	1	Bellows		
14	853012	4	Hose clamp		
15	3885384	1	Exhaust pipe		
16	3808880	4	Flange screw		(3855472)

D3-110I-A, D3-130I-A, D3-160I-A

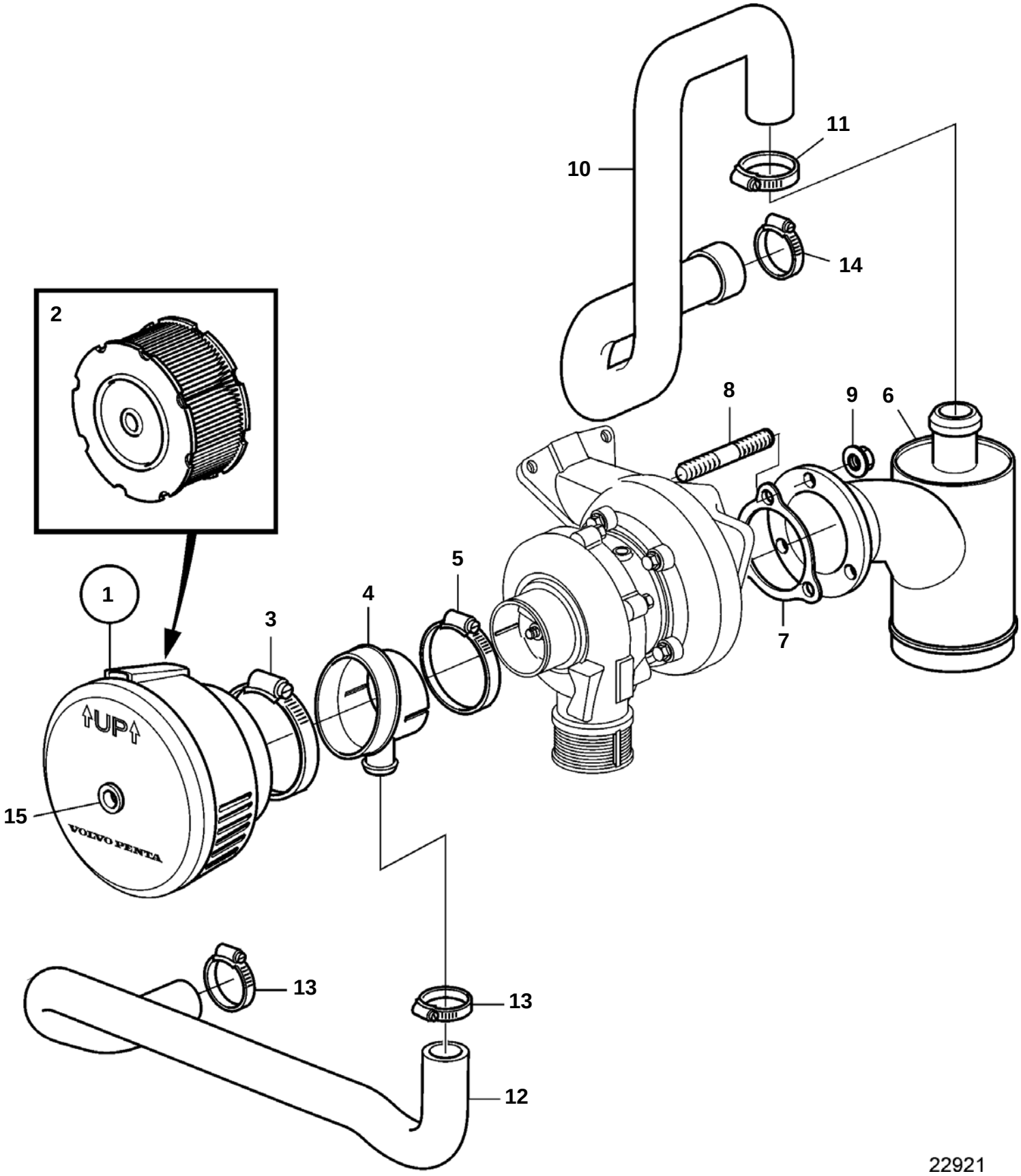

D3-110I-A, D3-130I-A, D3-160I-A

REF	PART NO.	QTY	DESCRIPTION	SEE SEC.	NOTES
1	3582357	1	Air filter kit		
			· Bulletin 44-47	44-47-EN	New Air Filter for 31, 41 and TAMD42WJ Engines
2	3582358	1	· Air filter insert		
			· Bulletin 44-47	44-47-EN	New Air Filter for 31, 41 and TAMD42WJ Engines
3	943479	1	Hose clamp		
4	3586801	1	Adapter		
5	943479	2	Hose clamp		
6	3807305	1	Exhaust pipe		
7	1275549	1	Gasket		
8	982449	3	Stud		
9	981152	3	Flange nut		
10	3584324	1	Hose		
11	943476	1	Hose clamp		
12	3586800	1	Hose, crankcase vent.		
13	943473	2	Hose clamp		
14	943477	1	Hose clamp		
15		1	Plastic plug		

D3-110I-B, D3-110I-C, D3-130I-B, D3-130I-C, D3-160I-B, D3-160I-C

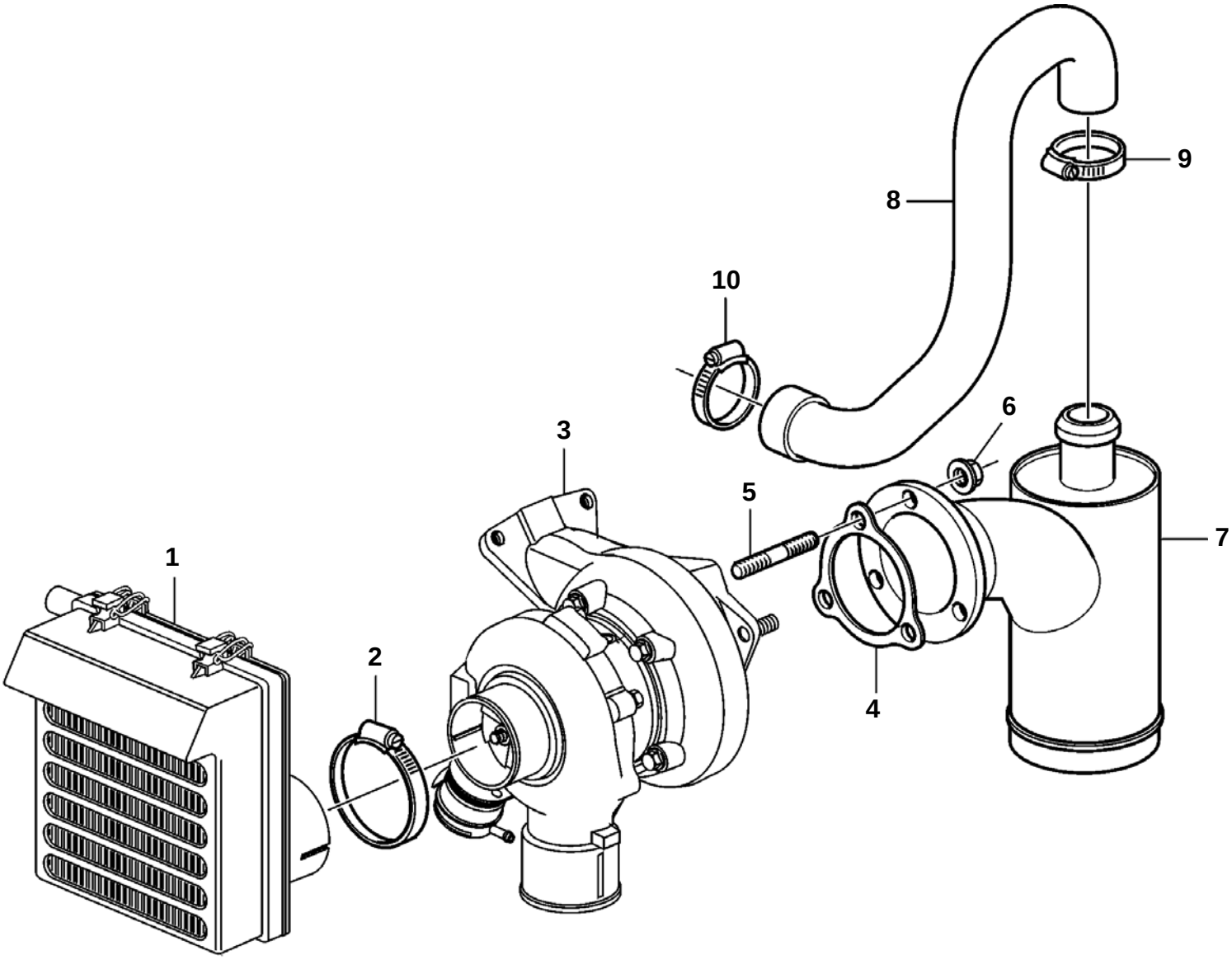

22754

D3-110I-B, D3-110I-C, D3-130I-B, D3-130I-C, D3-160I-B, D3-160I-C

REF	PART NO.	QTY	DESCRIPTION	SEE SEC.	NOTES
1	3889496	1	Air filter kit	9370	
2	961672	1	Hose clamp		
3	3802145	1	Turbocharger, exch		
4	1275549	1	Gasket		
5	982449	2	Stud		
	991052	1	Stud		For bracket.
6	981152	3	Flange nut		
7	3807305	1	Exhaust pipe		
8	3819741	1	Hose		
9	943476	1	Hose clamp		
10	943477	1	Hose clamp		

D3-190I-B, D3-190I-C

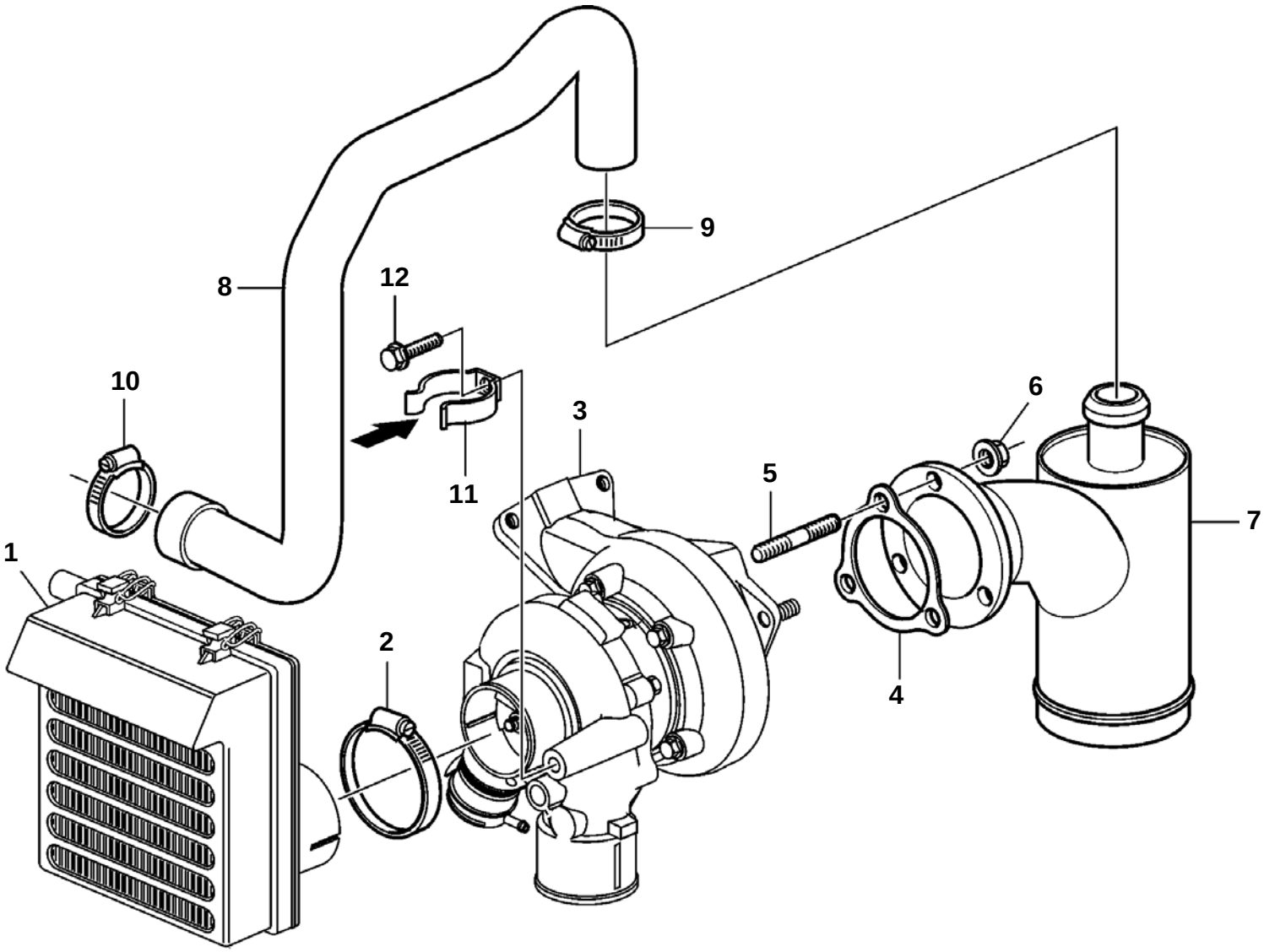

22720

D3-190I-B, D3-190I-C

REF	PART NO.	QTY	DESCRIPTION	SEE SEC.	NOTES
1	3889496	1	Air filter kit	9370	
2	961672	1	Hose clamp		
3	3802167	1	Turbocharger, exch		
4	1275549	1	Gasket		
5	982449	2	Stud		
	991052	1	Stud		For bracket.
6	981152	3	Flange nut		
7	3807305	1	Exhaust pipe		
8	3884397	1	Hose		
9	943476	1	Hose clamp		
10	943477	1	Hose clamp		
11	3843835	1	Clip		
12	941792	1	Screw		

Air Filter with Installation Components

D3-110I-B, D3-110I-C, D3-130A-B, D3-130I-B, D3-130A-C, D3-130I-C, D3-160A-B, D3-160I-B, D3-160A-C, D3-160I-C, D3-190A-B, D3-190I-B, D3-190A-C, D3-190I-C

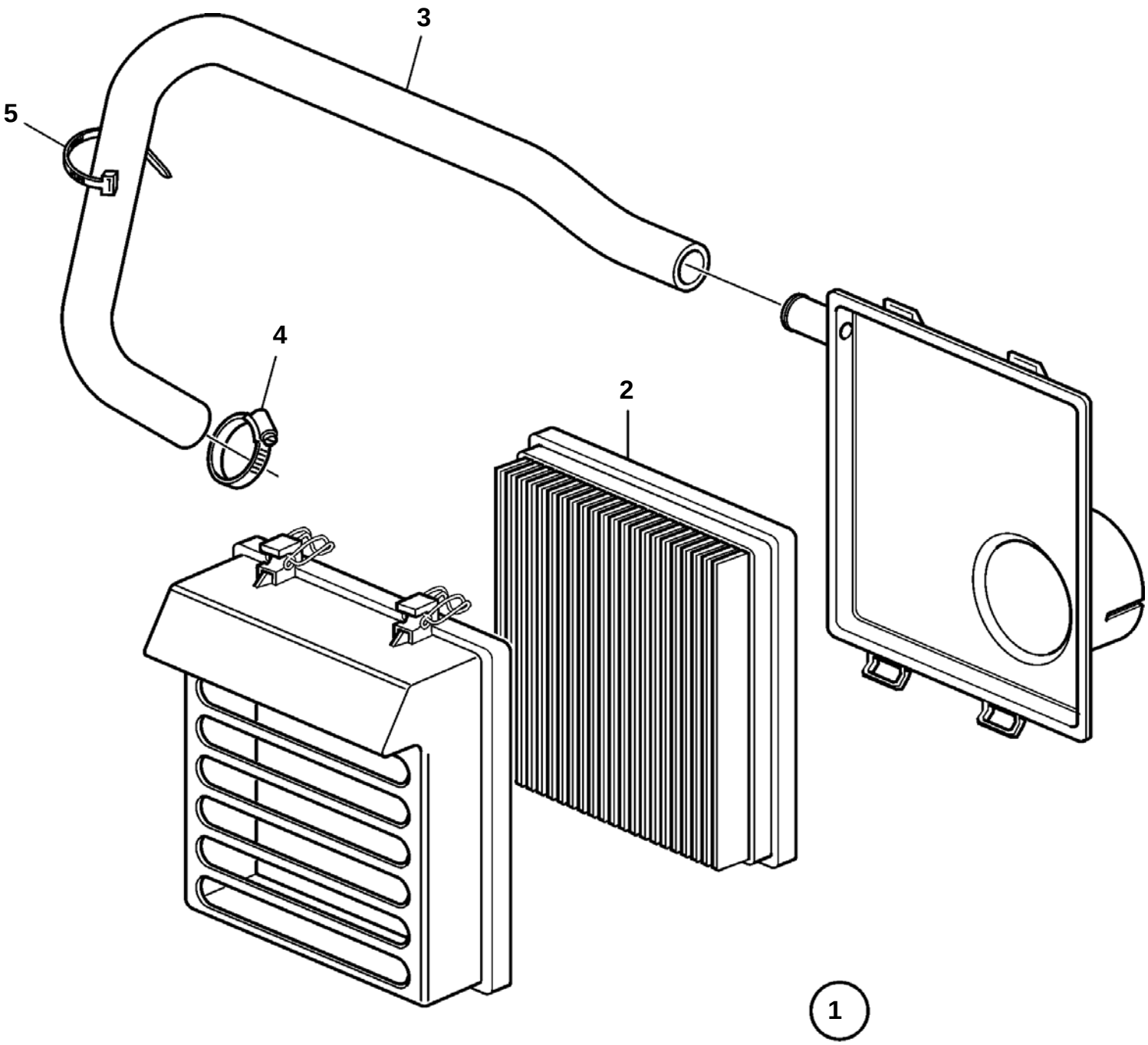

22719

D3-110I-B, D3-110I-C, D3-130A-B, D3-130I-B, D3-130A-C, D3-130I-C, D3-160A-B, D3-160I-B, D3-160A-C, D3-160I-C, D3-190A-B, D3-190I-B, D3-190A-C, D3-190I-C

REF	PART NO.	QTY	DESCRIPTION
1	3889496	1	Air filter kit
2	3889484	1	· Air filter insert
3	3817387	1	Hose
4	943473	1	Hose clamp
5	948616	1	Strip clamp

D3-110I-A, D3-130A-A, D3-130I-A, D3-160A-A, D3-160I-A

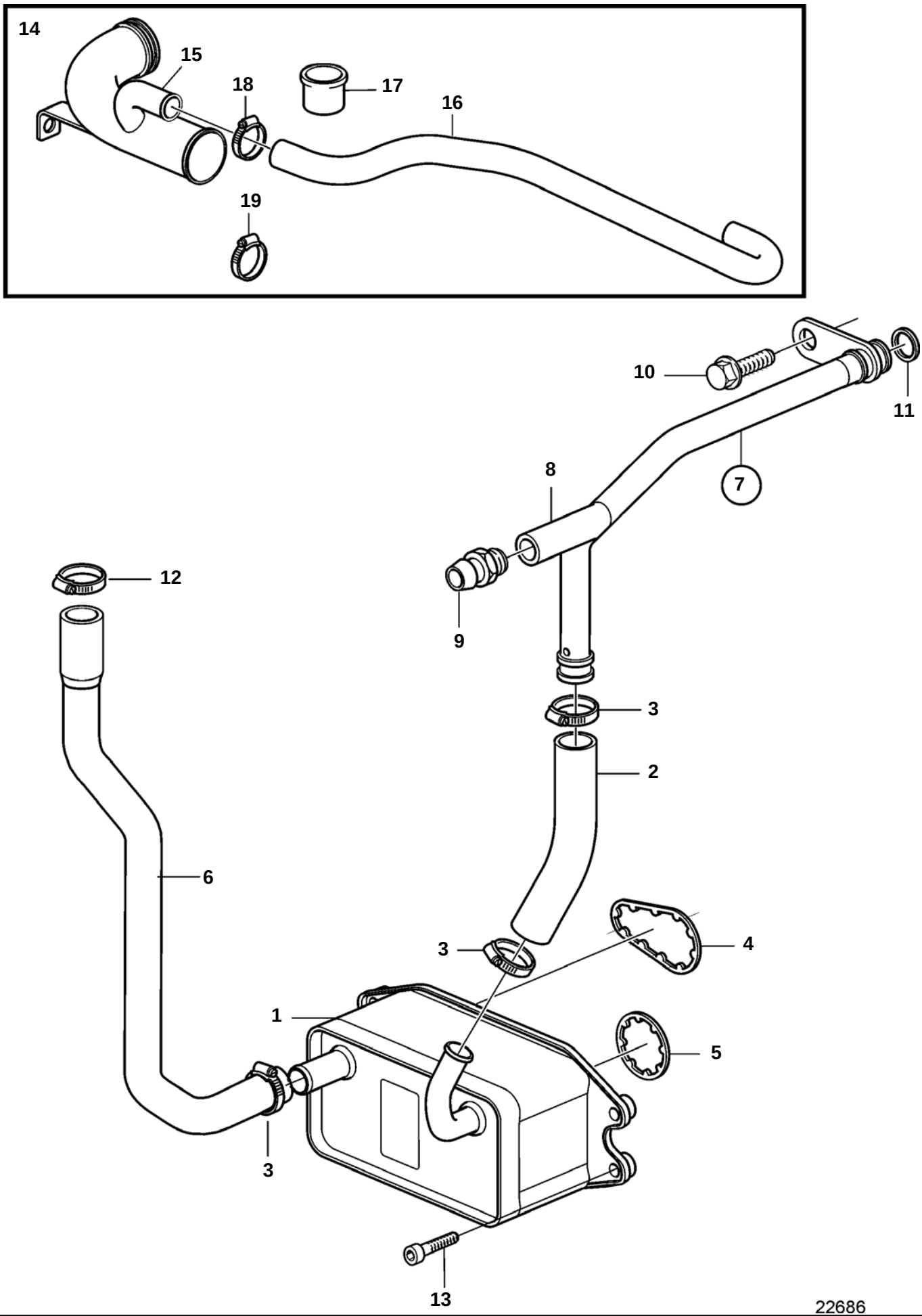

D3-110I-A, D3-130A-A, D3-130I-A, D3-160A-A, D3-160I-A

REF	PART NO.	QTY	DESCRIPTION	NOTES
1	8677973	1	Oil cooler	Replaced by kit 3888133.
2	3808566	1	Hose	(31104688)
3	943472	3	Hose clamp	
4	30637199	1	Sealing ring	
5	30637339	1	Seal	(9463173)
6	3584291	1	Hose	Superseded by kit 3817479. See fig No 14.
7	8636658	1	Hose	
8	31104740	1	· Nipple	
9	947893	1	· Drain cock	
10	945444	1	Flange screw	
11	982292	1	O-ring	
12	943473	1	Hose clamp	
13	986318	4	Screw	
14	3817479	1	Coolant pipe	
15	3817368	1	· Pipe	
16	3812465	1	· Hose	
17	845422	1	· Cap	
18	943472	1	· Hose clamp	
19	943473	1	· Hose clamp	

D3-110I-B, D3-130A-B, D3-130I-B, D3-160A-B, D3-160I-B, D3-190A-B, D3-190I-B

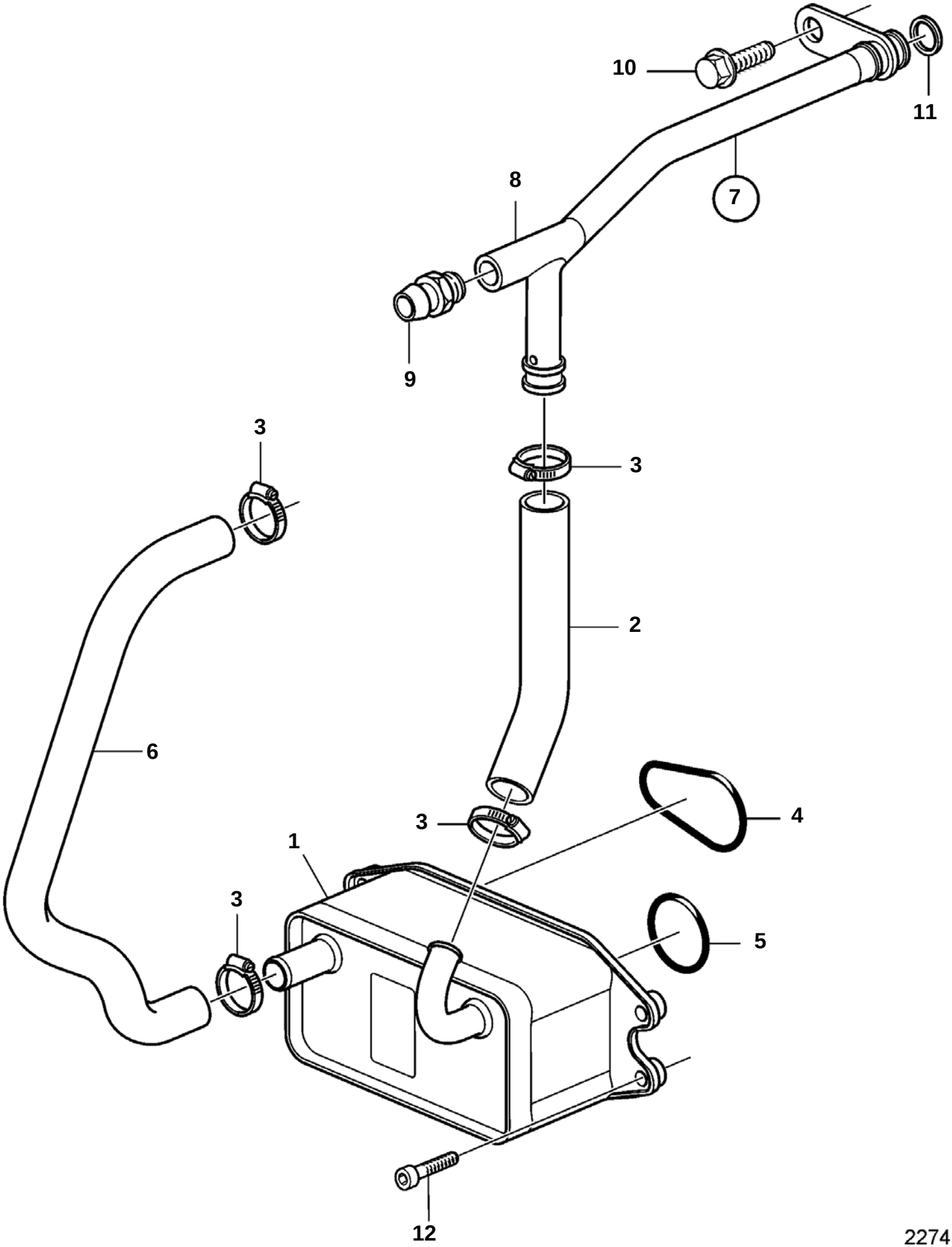

D3-110I-B, D3-130A-B, D3-130I-B, D3-160A-B, D3-160I-B, D3-190A-B, D3-190I-B

REF	PART NO.	QTY	DESCRIPTION	NOTES
1	30713603	1	Oil cooler	Replaced by kit 3888133.
2	3808566	1	Hose	
3	943472	4	Hose clamp	
4	30637199	1	Sealing ring	
5	30637339	1	Seal	
6	3812465	1	Hose	
7	8636658	1	Hose	
8	31104740	1	· Nipple	
9	947893	1	· Drain cock	
10	945444	1	Flange screw	
11	982292	1	O-ring	
12	986318	4	Screw	

D3-110I-C, D3-130A-C, D3-130I-C, D3-160A-C, D3-160I-C, D3-190A-C, D3-190I-C

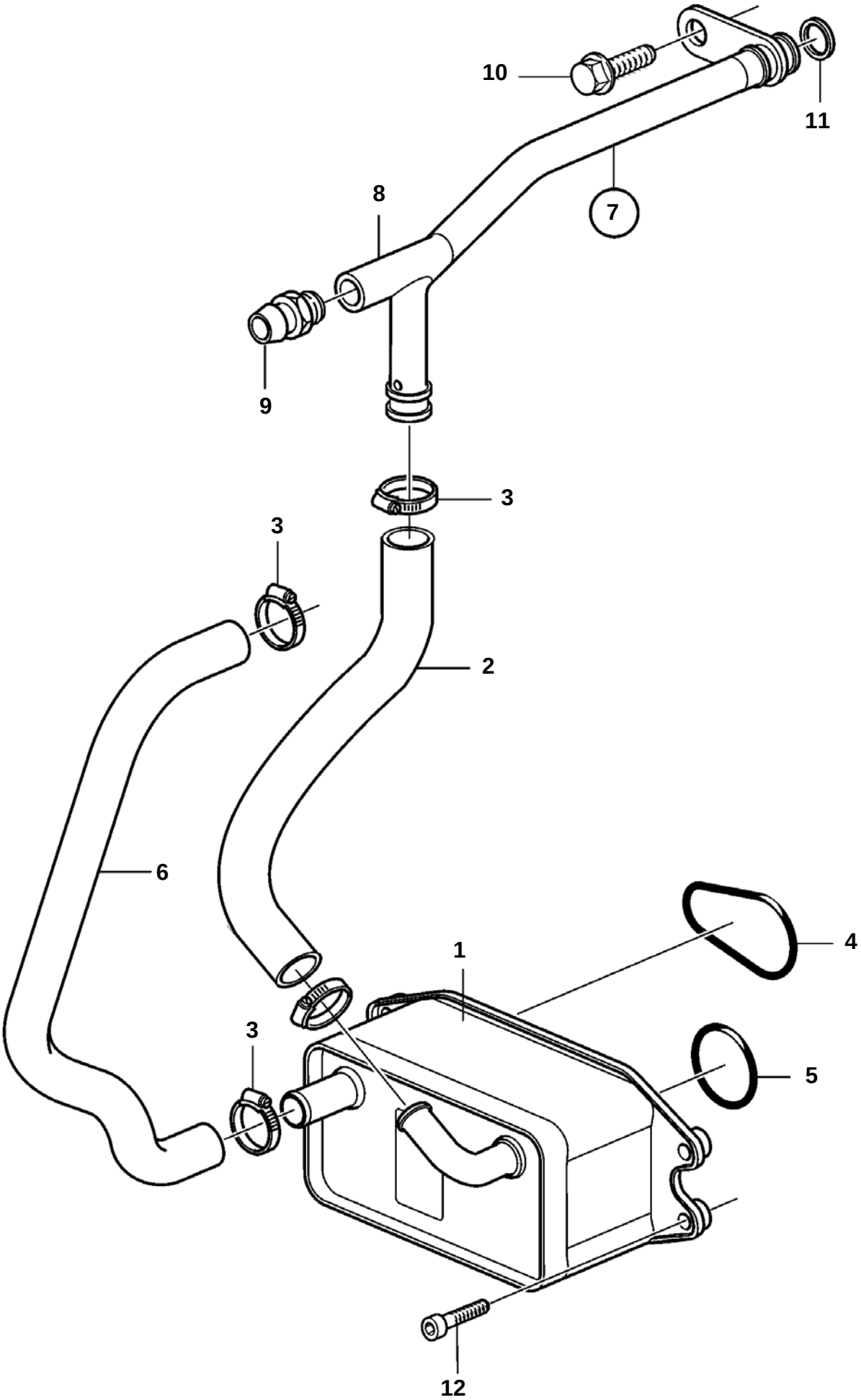

D3-110I-C, D3-130A-C, D3-130I-C, D3-160A-C, D3-160I-C, D3-190A-C, D3-190I-C

REF	PART NO.	QTY	DESCRIPTION
1	30751937	1	Oil cooler
2	3888067	1	Hose
3	943472	4	Hose clamp
4	30637199	1	Sealing ring
5	30637339	1	Seal
6	3812465	1	Hose
7	8636658	1	Hose
8	31104740	1	· Nipple
9	947893	1	· Drain cock
10	945444	1	Flange screw
11	982292	1	O-ring
12	986318	4	Screw

Heat Exchanger With Installation Parts

D3-110I-A, D3-130A-A, D3-160A-A, D3-160I-A

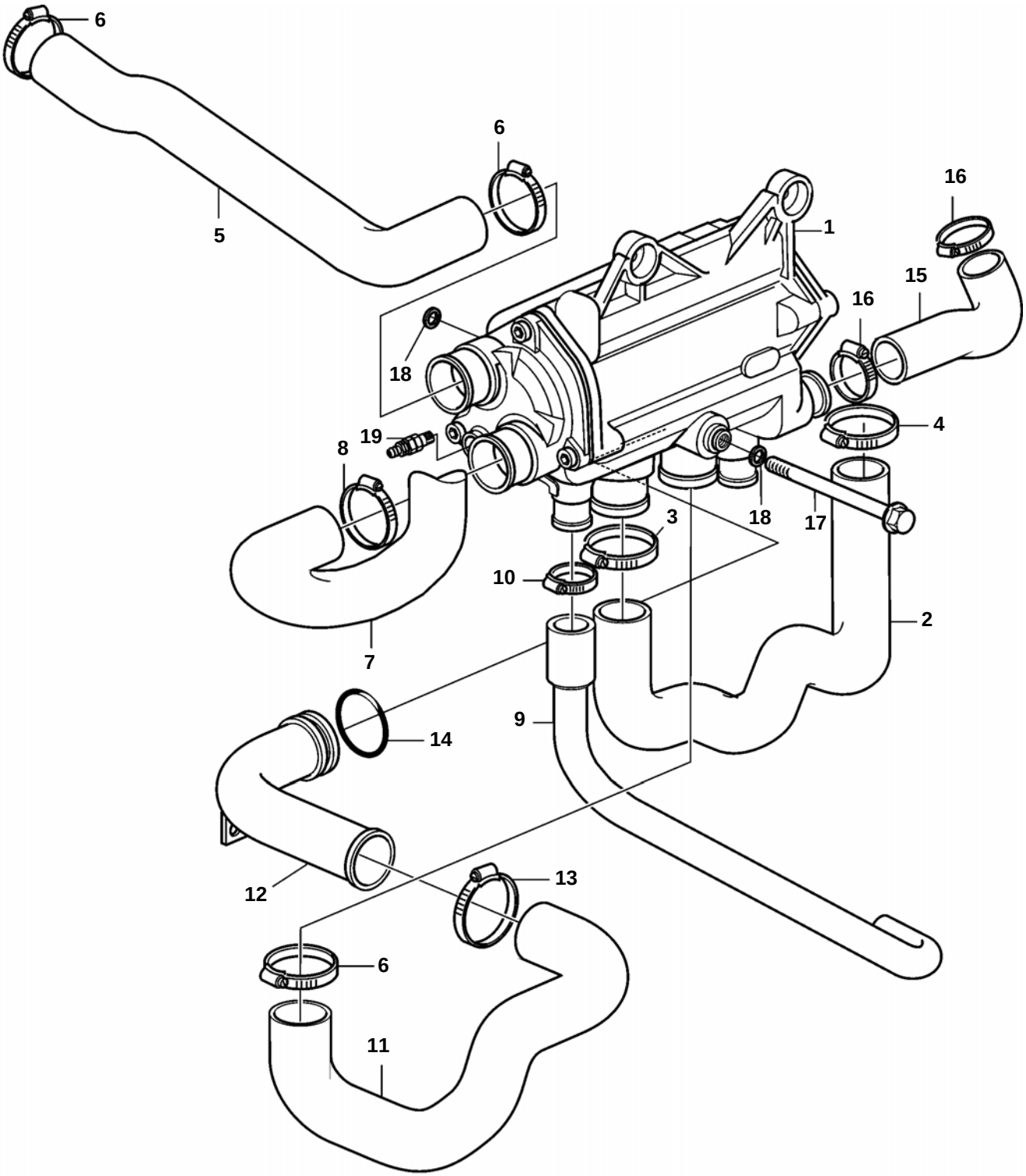

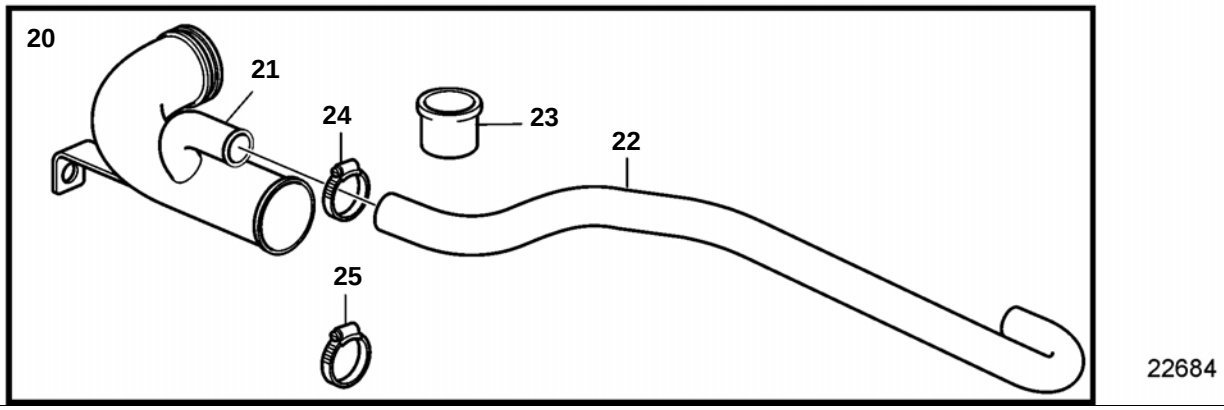

D3-110I-A, D3-130A-A, D3-160A-A, D3-160I-A

REF	PART NO.	QTY	DESCRIPTION	SEE SEC.	NOTES
1	3586805	1	Heat exchanger		
				6823	
2	3584322	1	Hose, therm. housing		
3	943477	1	Hose clamp		
4	943478	1	Clamp		
5	3584323	1	Hose		Heat exchanger-after cooler.
6	943477	3	Hose clamp		
7	3584324	1	Hose		Heat exchanger-exhaust riser.
8	943479	1	Hose clamp		
9	3584291	1	Hose		Superseded by kit 3817479. See fig No 20., Heat exchanger-oil cooler.
10	943473	1	Hose clamp		
11	3587150	1	Hose, circulation pump		
12	3587250	1	Pipe connection, circulation pump		Superseded by kit 3817479. See fig No 20.
13	943476	1	Hose clamp		
14	976045	1	O-ring		
15	3584330	1	Hose, therm. housing		
16	943475	2	Hose clamp		
17	968892	1	Flange screw		
18	976944	2	Washer		
19	949918	1	Drain cock		
20	3817479	1	Coolant pipe		
21	3817368	1	· Pipe		
22	3812465	1	· Hose		
23	845422	1	· Cap		
24	943472	1	· Hose clamp		
25	943473	1	· Hose clamp		

Heat Exchanger With Installation Parts

D3-110I-B, D3-110I-C, D3-130A-B, D3-130I-B, D3-130A-C, D3-130I-C, D3-160A-B, D3-160I-B, D3-160A-C, D3-160I-C

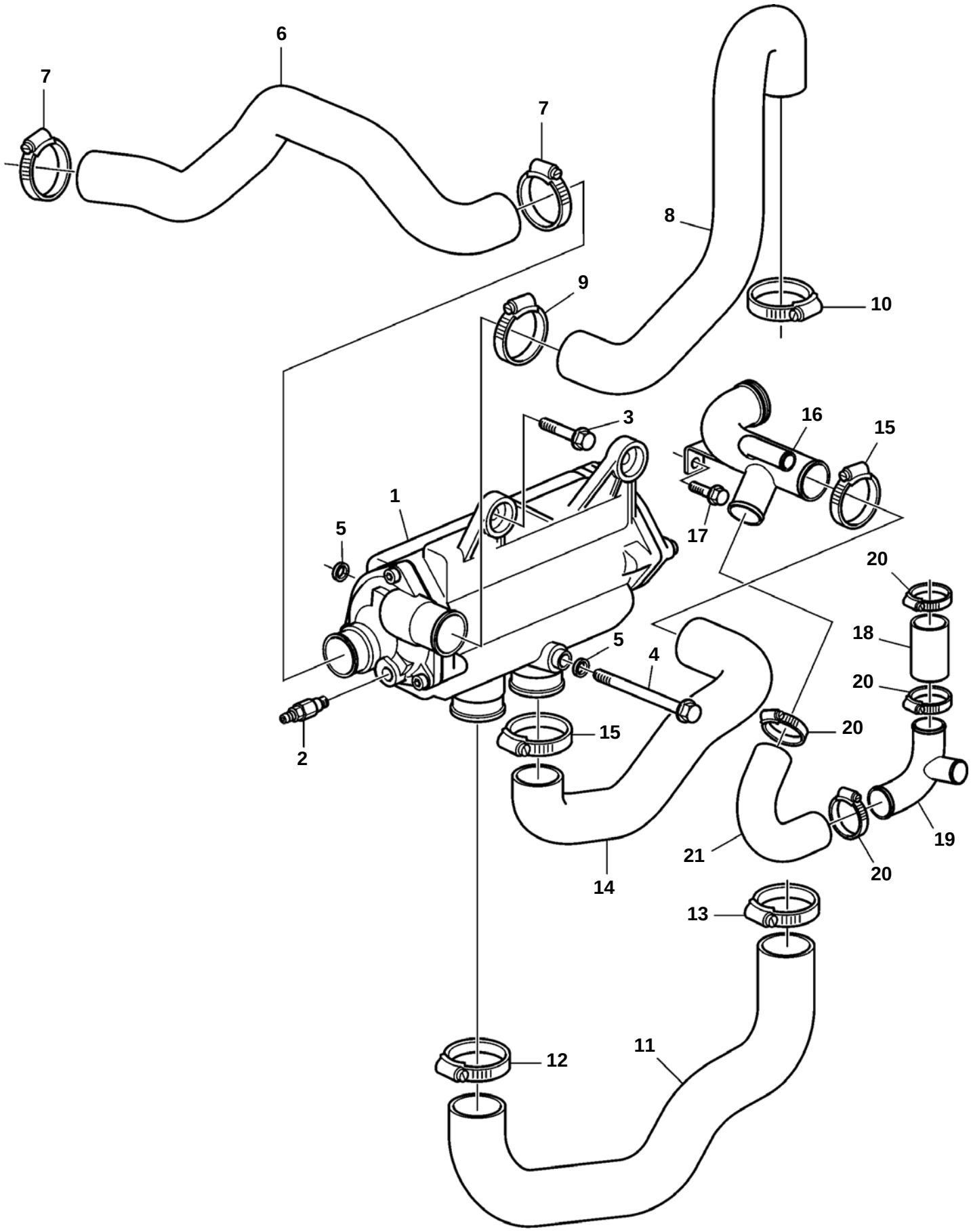

D3-110I-B, D3-110I-C, D3-130A-B, D3-130I-B, D3-130A-C, D3-130I-C, D3-160A-B, D3-160I-B, D3-160A-C, D3-160I-C

REF	PART NO.	QTY	DESCRIPTION	SEE SEC.	NOTES
1	3840056	1	Heat exchanger		
				9371	
2	949918	1	Drain cock		
3		1	Flange screw		
4	968892	1	Flange screw		
5	976944	1	Washer		
6	3819737	1	Hose		Heat exchanger-after cooler.
7	943477	2	Hose clamp		
8	3819741	1	Hose		Heat exchanger-exhaust riser.
9	943476	1	Hose clamp		
10	943477	1	Hose clamp		
11	3584322	1	Hose		Thermostat housing-heat exchanger.
12	943477	1	Hose clamp		
13	943478	1	Clamp		
14	3587150	1	Hose		
15	943474	2	Hose clamp		
16	3819107	1	Pipe		
17		1	Flange screw		
18	3819122	1	Hose		
19	3819117	1	Tube		
20	943475	4	Hose clamp		
21	3819127	1	Hose		

D3-190A-B, D3-190I-B, D3-190A-C, D3-190I-C

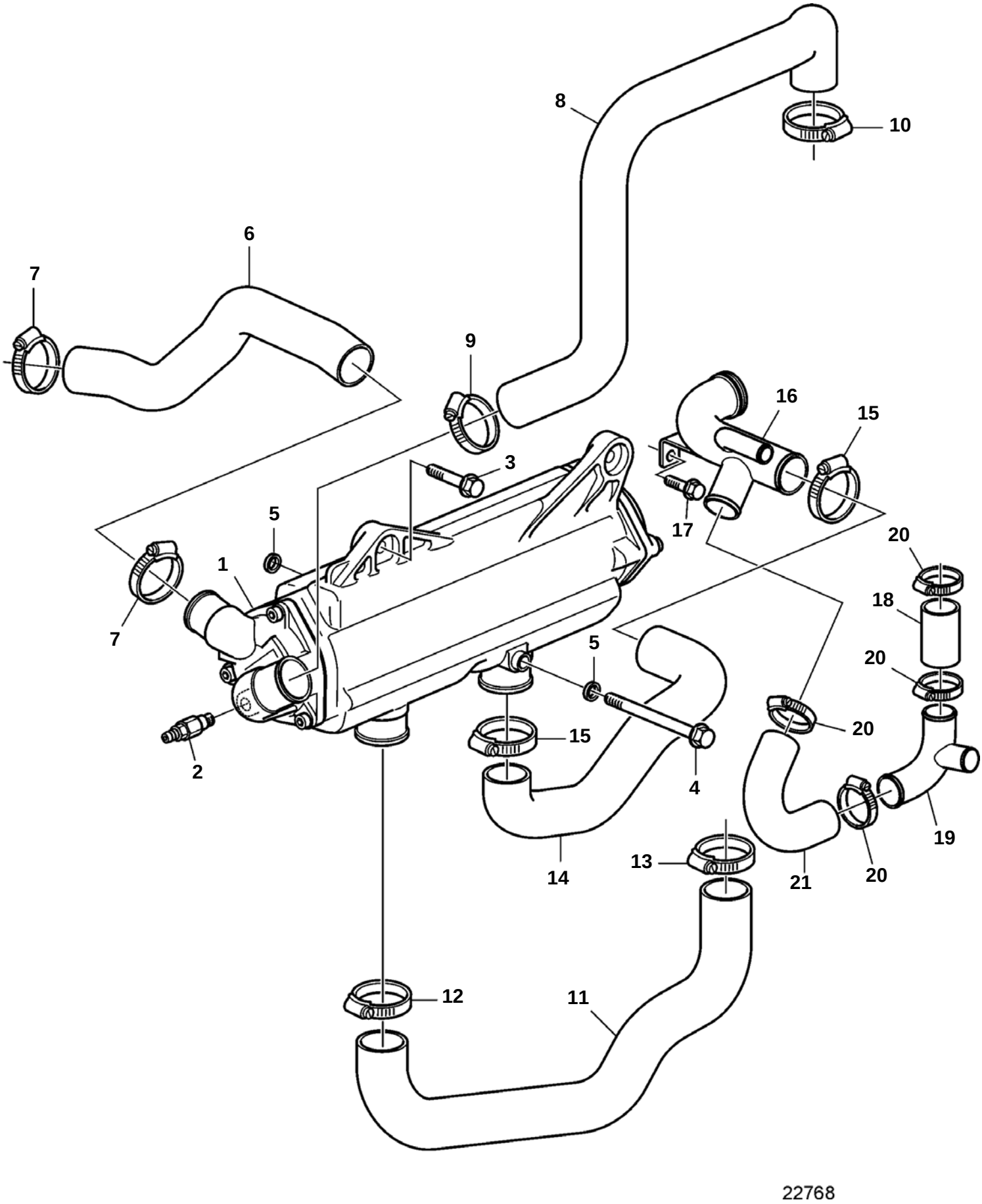

D3-190A-B, D3-190I-B, D3-190A-C, D3-190I-C

REF	PART NO.	QTY	DESCRIPTION	SEE SEC.	NOTES
1	3884167	1	Heat exchanger		
				9372	
2	949918	1	Drain cock		
3		1	Flange screw		
4	968892	1	Flange screw		
5	976944	1	Washer		
6	3817384	1	Hose		Heat exchanger-after cooler.
7	943477	2	Hose clamp		
8	3884397	1	Hose		Heat exchanger-exhaust riser.
9	943476	1	Hose clamp		
10	943477	1	Hose clamp		
11	3819933	1	Hose		Thermostat housing-heat exchanger.
12	943477	1	Hose clamp		
13	943478	1	Clamp		
14	3587150	1	Hose		
15	943474	2	Hose clamp		
16	3819107	1	Pipe		
17		1	Flange screw		
18	3819122	1	Hose		
19	3819117	1	Tube		
20	943475	4	Hose clamp		
21	3819127	1	Hose		

D3-110I-A, D3-130A-A, D3-130I-A, D3-160A-A, D3-160I-A

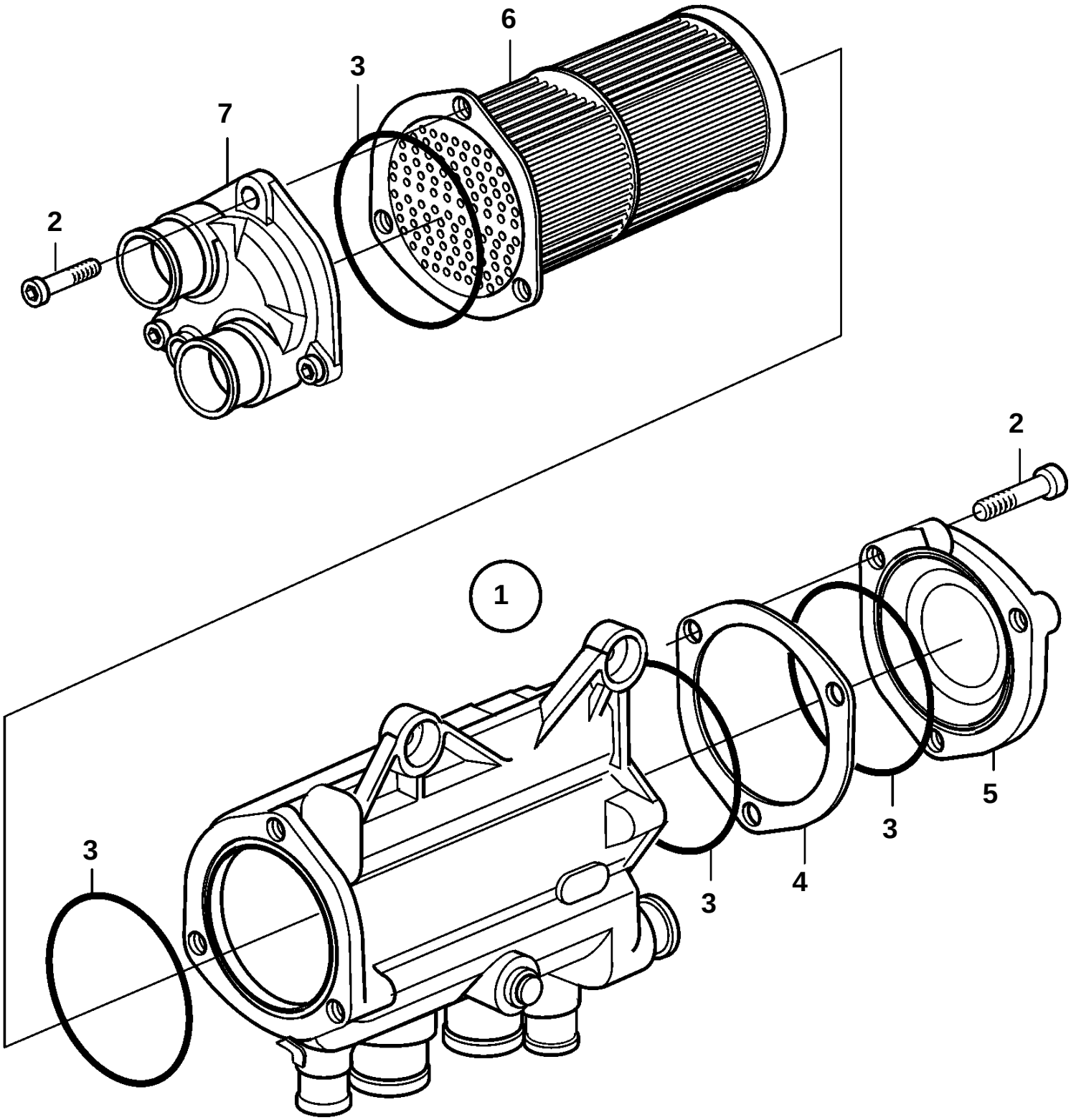

D3-110I-A, D3-130A-A, D3-130I-A, D3-160A-A, D3-160I-A

REF	PART NO.	QTY	DESCRIPTION
1	3586805	1	Heat exchanger
2	3838337	6	· Screw
3	3581070	4	· O-ring
4	3580870	1	· Washer
5	888627	1	· Cover
6	3588906	1	· Insert
7	3588907	1	· End cover

D3-110I-B, D3-110I-C, D3-130A-B, D3-130I-B, D3-130A-C, D3-130I-C, D3-160A-B, D3-160I-B, D3-160A-C, D3-160I-C

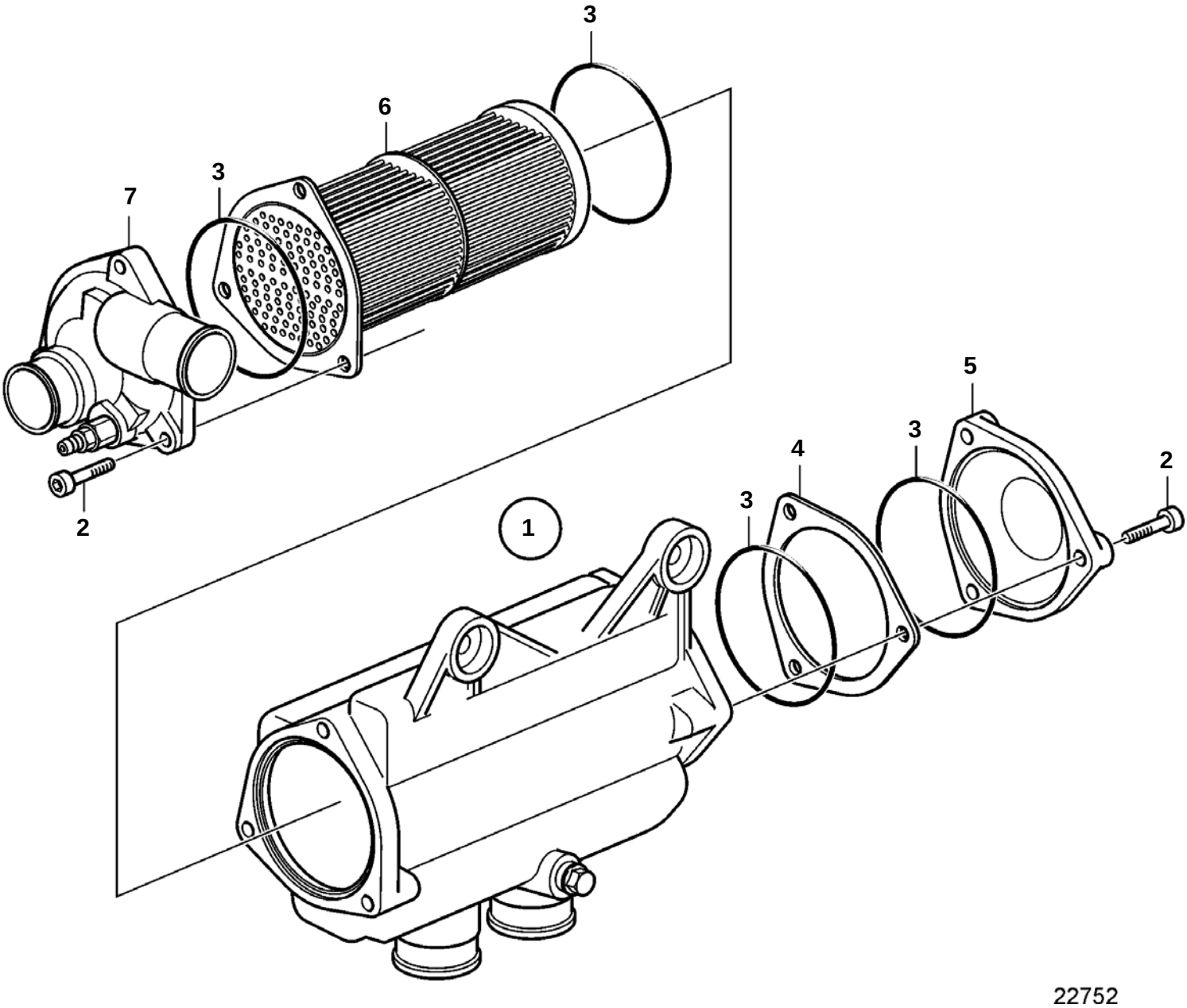

D3-110I-B, D3-110I-C, D3-130A-B, D3-130I-B, D3-130A-C, D3-130I-C, D3-160A-B, D3-160I-B, D3-160A-C, D3-160I-C

REF	PART NO.	QTY	DESCRIPTION
1	3840056	1	Heat exchanger
2	959224	6	· Screw
3	3581070	4	· O-ring
4	3580870	1	· Washer
5	888627	1	· Cover
6	3588906	1	· Insert
7	3840924	1	· End cover

D3-190A-B, D3-190I-B, D3-190A-C, D3-190I-C

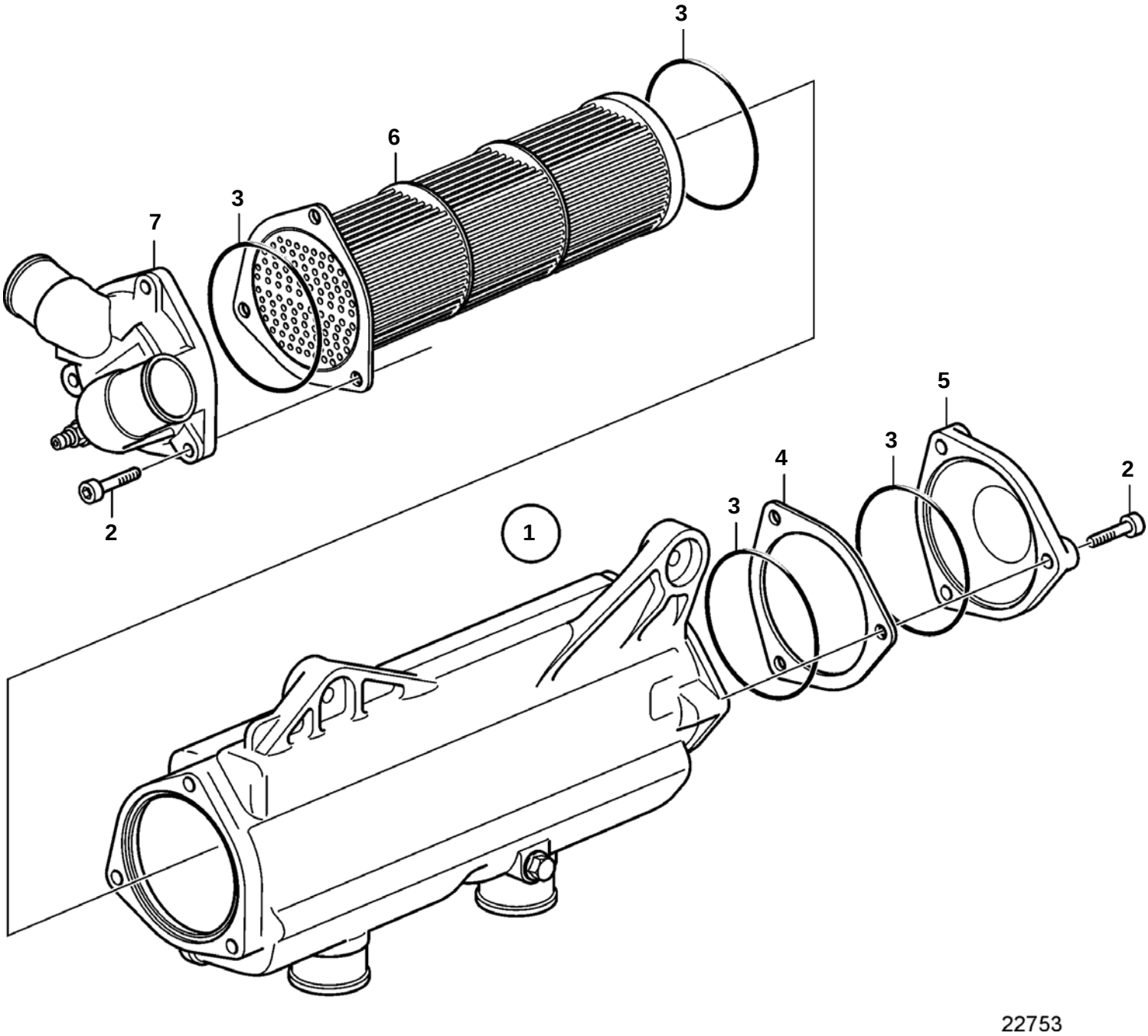

D3-190A-B, D3-190I-B, D3-190A-C, D3-190I-C

REF	PART NO.	QTY	DESCRIPTION
1	3884167	1	Heat exchanger
2	959224	6	· Screw
3	3581070	4	· O-ring
4	3580870	1	· Washer
5	888627	1	· Cover
6	3840375	1	· Insert
7	3884169	1	· End cover

Thermostat Housing and Water pump assy

D3-110I-A, D3-130A-A, D3-130I-A, D3-160A-A, D3-160I-A

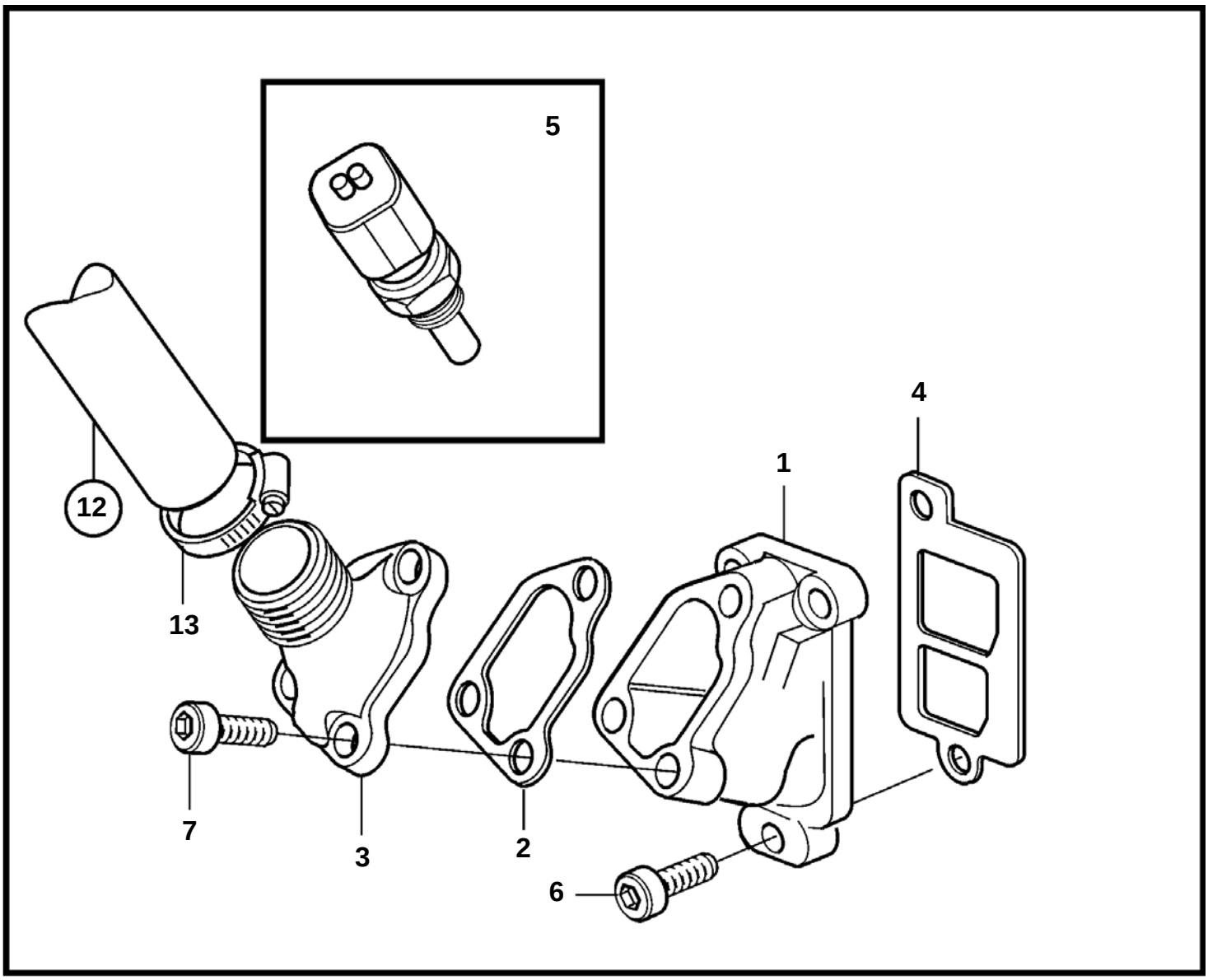

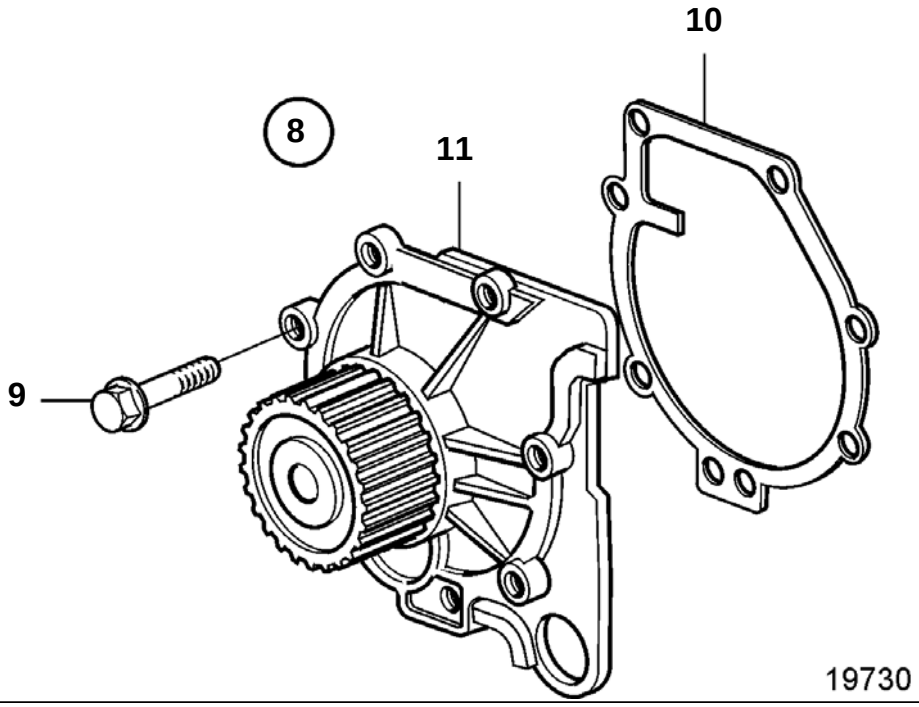

D3-110I-A, D3-130A-A, D3-130I-A, D3-160A-A, D3-160I-A

REF	PART NO.	QTY	DESCRIPTION	SEE SEC.	NOTES
1			Thermostat housing		
				6323	
2		1	· Gasket		
3		1	· Connection pipe		
4	8636573	1	· Gasket		
5	8653103	1	Temperature sensor		
6	969156	2	6 point socket screw		
7			6 point socket screw		
8	30751022	1	Circulation pump		(274216)
9	979090	7	· Flange screw		
10	1397532	1	· Gasket		
11		1	Water pump		
12	888609	1	Hose		
				6323	
13	943477	1	Hose clamp		

Thermostat Housing and Water pump assy

D3-110I-B, D3-110I-C, D3-130A-B, D3-130I-B, D3-130A-C, D3-130I-C, D3-160A-B, D3-160I-B, D3-160A-C, D3-160I-C, D3-190A-B, D3-190I-B, D3-190A-C, D3-190I-C

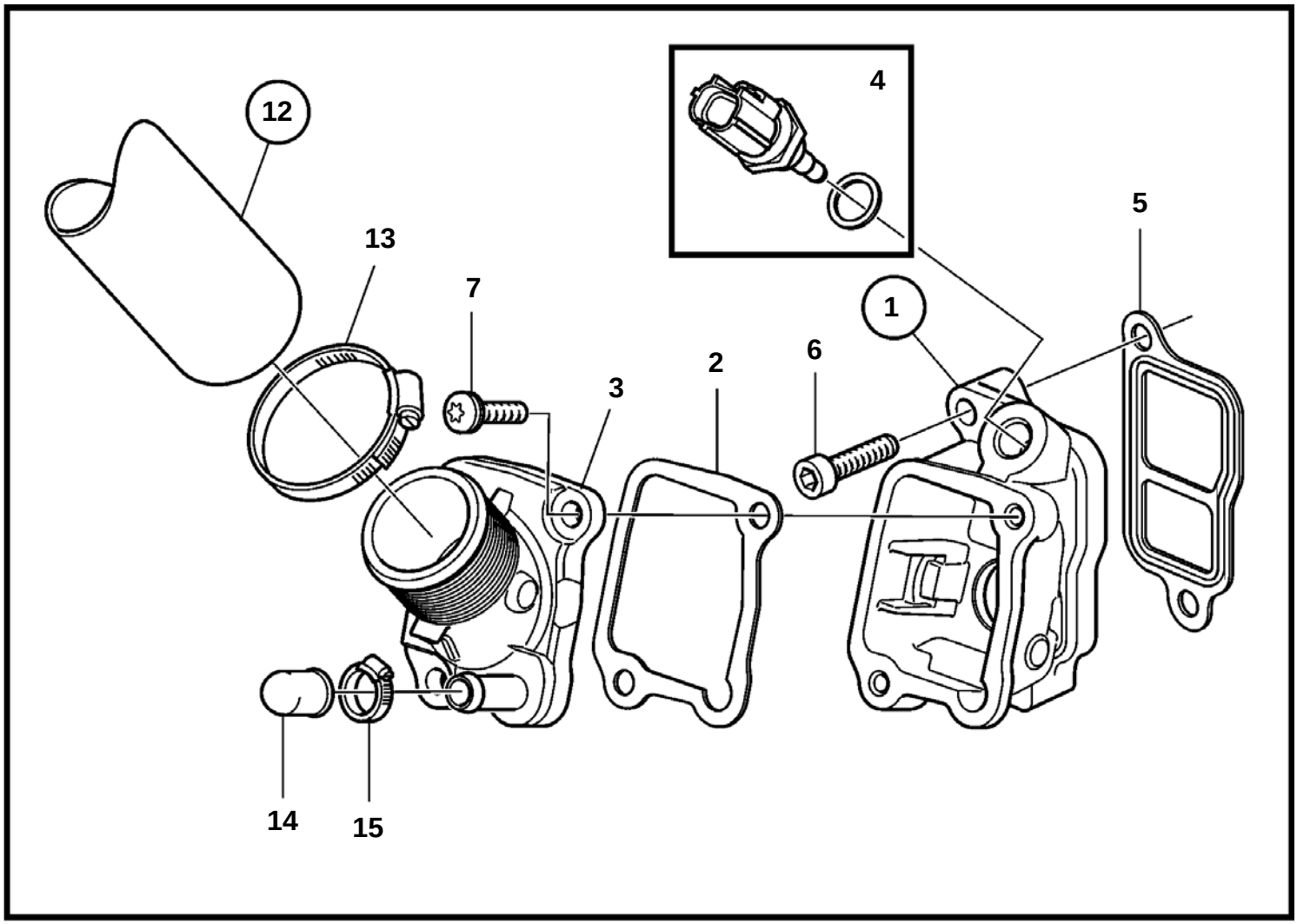

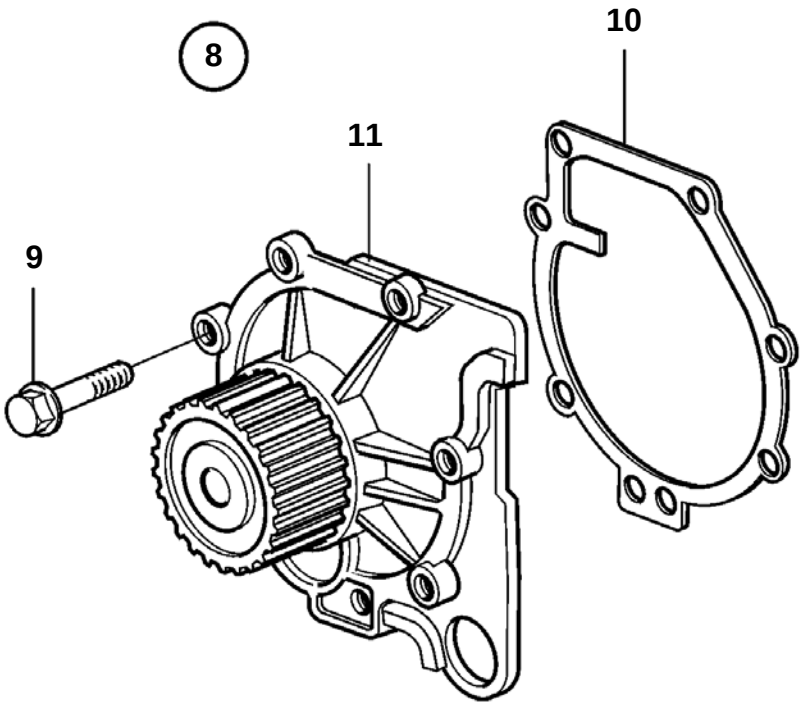

23557

D3-110I-B, D3-110I-C, D3-130A-B, D3-130I-B, D3-130A-C, D3-130I-C, D3-160A-B, D3-160I-B, D3-160A-C, D3-160I-C, D3-190A-B, D3-190I-B, D3-190A-C, D3-190I-C

REF	PART NO.	QTY	DESCRIPTION	SEE SEC.
1			Thermostat housing	
				9405
2		1	· Gasket	
3		1	· Connection pipe	
4	8653103	1	· Temperature sensor	
5	8636573	1	Gasket	
6	969156	2	6 point socket screw	
7		3	6 point socket screw	
8	30751022	1	Circulation pump	
9	979090	7	· Flange screw	
10	30677767	1	· Gasket	
11		1	Water pump	
12	888609	1	Hose	
				9405
13	943477	1	Hose clamp	
14	1276516	1	Plug	
15	945652	1	Hose clamp	

D3-110I-A, D3-130A-A, D3-130I-A, D3-160A-A, D3-160I-A

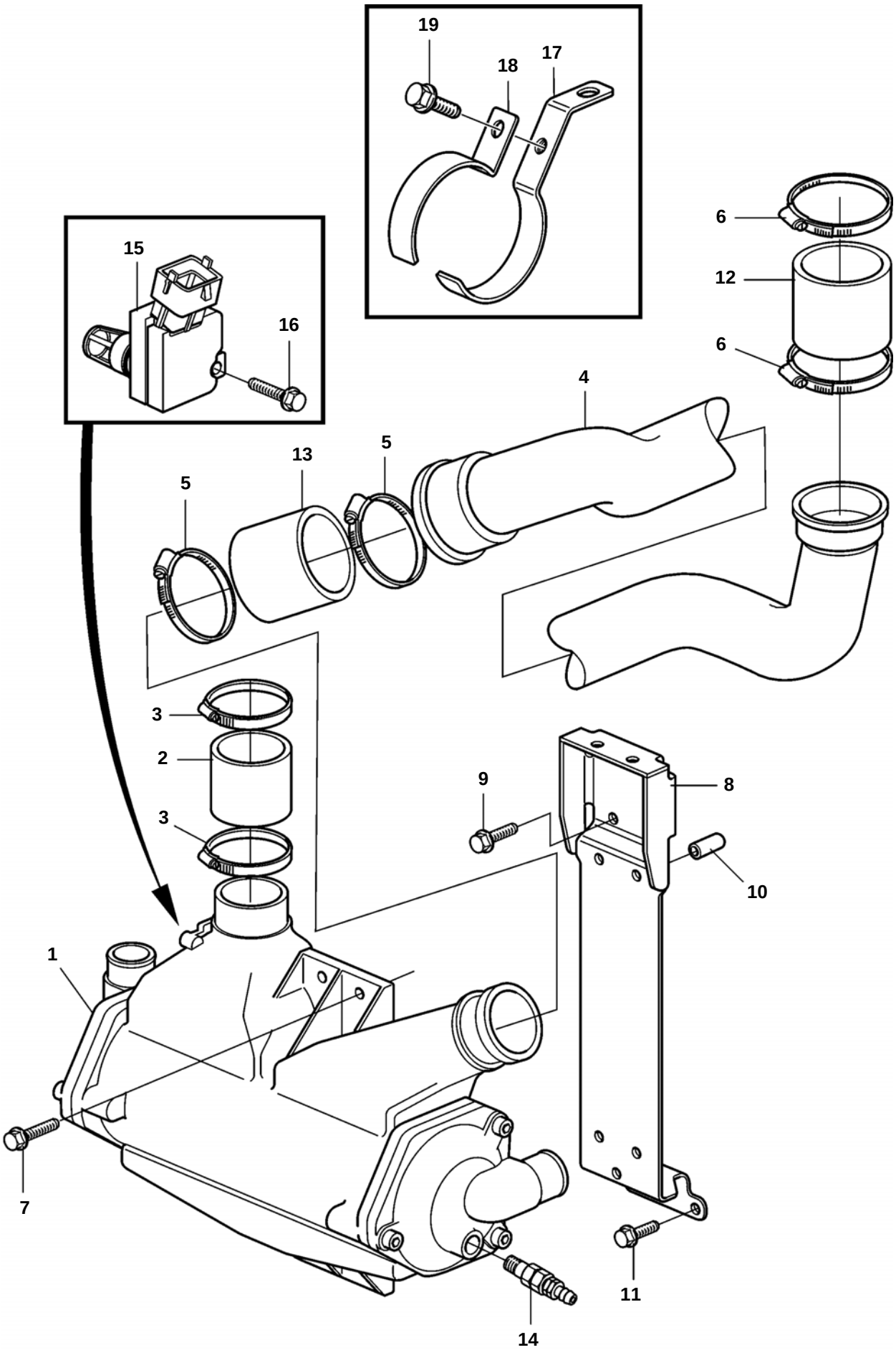

D3-110I-A, D3-130A-A, D3-130I-A, D3-160A-A, D3-160I-A

REF	PART NO.	QTY	DESCRIPTION	SEE SEC.	NOTES
1	888513	1	Intercooler		
				6824	
2	3584328	1	Hose		
3	943480	2	Clamp		
4	3589828	1	Charge air pipe, turbo		(3588796)
5	943480	2	Clamp		
6	943479	2	Hose clamp		
7	946671	4	Flange screw		
8	3584472	1	Bracket		
9	965182	2	Flange screw		
10	858392	2	Sleeve		
11	981177	2	Flange screw		
12	466327	1	Hose		
13	470464	1	Hose		
14	949918	1	Drain cock		
15	8677288	1	Sender		
16	969408	1	Screw		
17	3817119	1	Bracket		
18	3817121	1	Bracket		
19	967949	1	Screw		

D3-110I-B, D3-110I-C, D3-130A-B, D3-130I-B, D3-130A-C, D3-130I-C, D3-160A-B, D3-160I-B, D3-160A-C, D3-160I-C

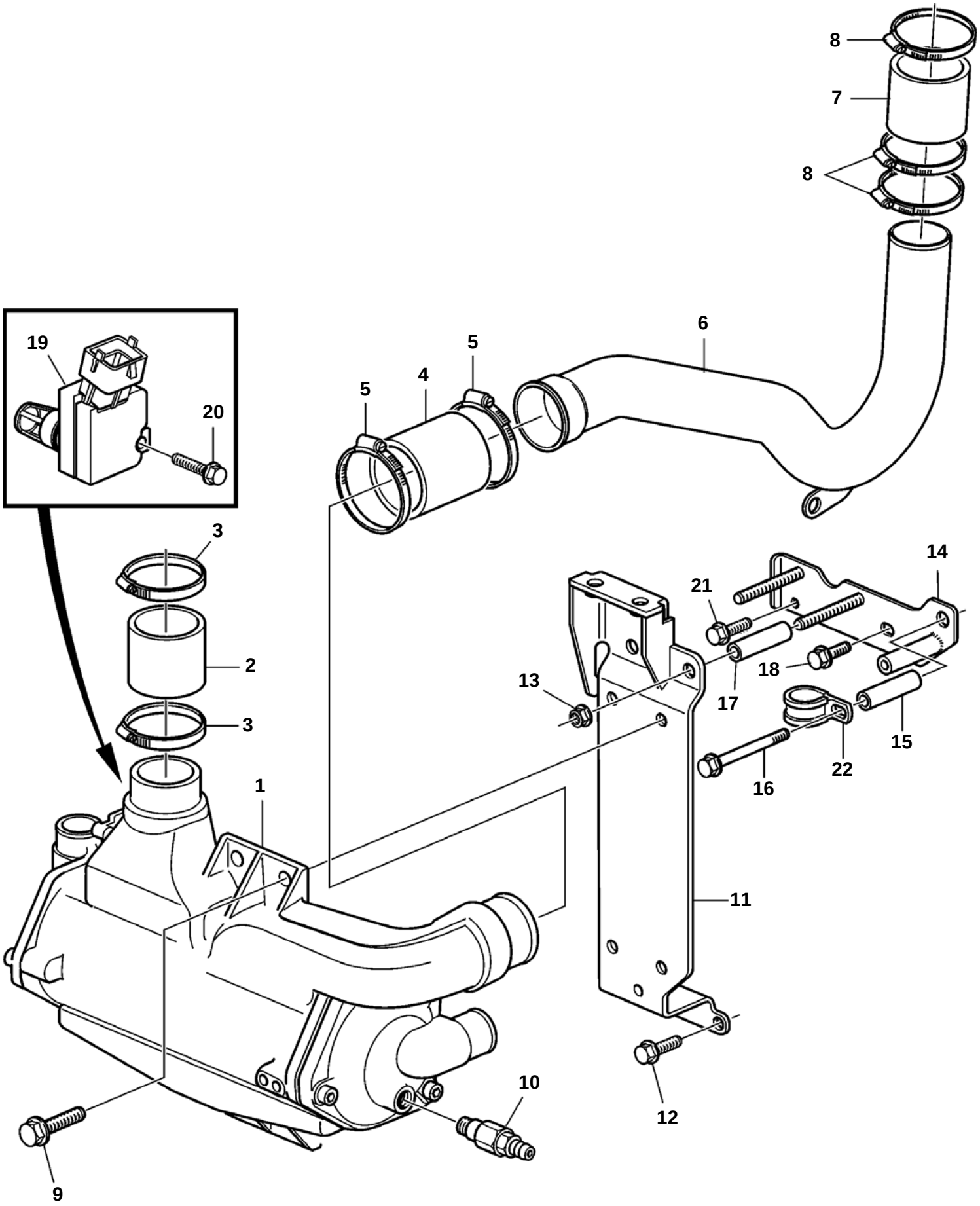

D3-110I-B, D3-110I-C, D3-130A-B, D3-130I-B, D3-130A-C, D3-130I-C, D3-160A-B, D3-160I-B, D3-160A-C, D3-160I-C

REF	PART NO.	QTY	DESCRIPTION	SEE SEC.
1	3819136	1	Intercooler	
				9363
2	30677765	1	Hose	
3	943480	2	Clamp	
4	470464	1	Hose, turbo	
5	943480	2	Clamp	
6	3886206	1	Charge air pipe	
7	847385	1	Hose	
8	943479	3	Hose clamp	
9	946671	4	Flange screw	
10	949918	1	Drain cock	
11	3819388	1	Bracket	
12	981177	2	Flange screw	
13	945408	2	Flange nut	
14	3819389	1	Bracket	
15	846425	1	Spacer sleeve	
16	965186	1	Flange screw	
17	858392	2	Sleeve	
18	947790	1	Flange screw	
19	30622083	1	Sender	
20	969408	1	Screw	
21	987428	1	Screw	
22	980614	1	Clamp	

D3-190A-B, D3-190I-B, D3-190A-C, D3-190I-C

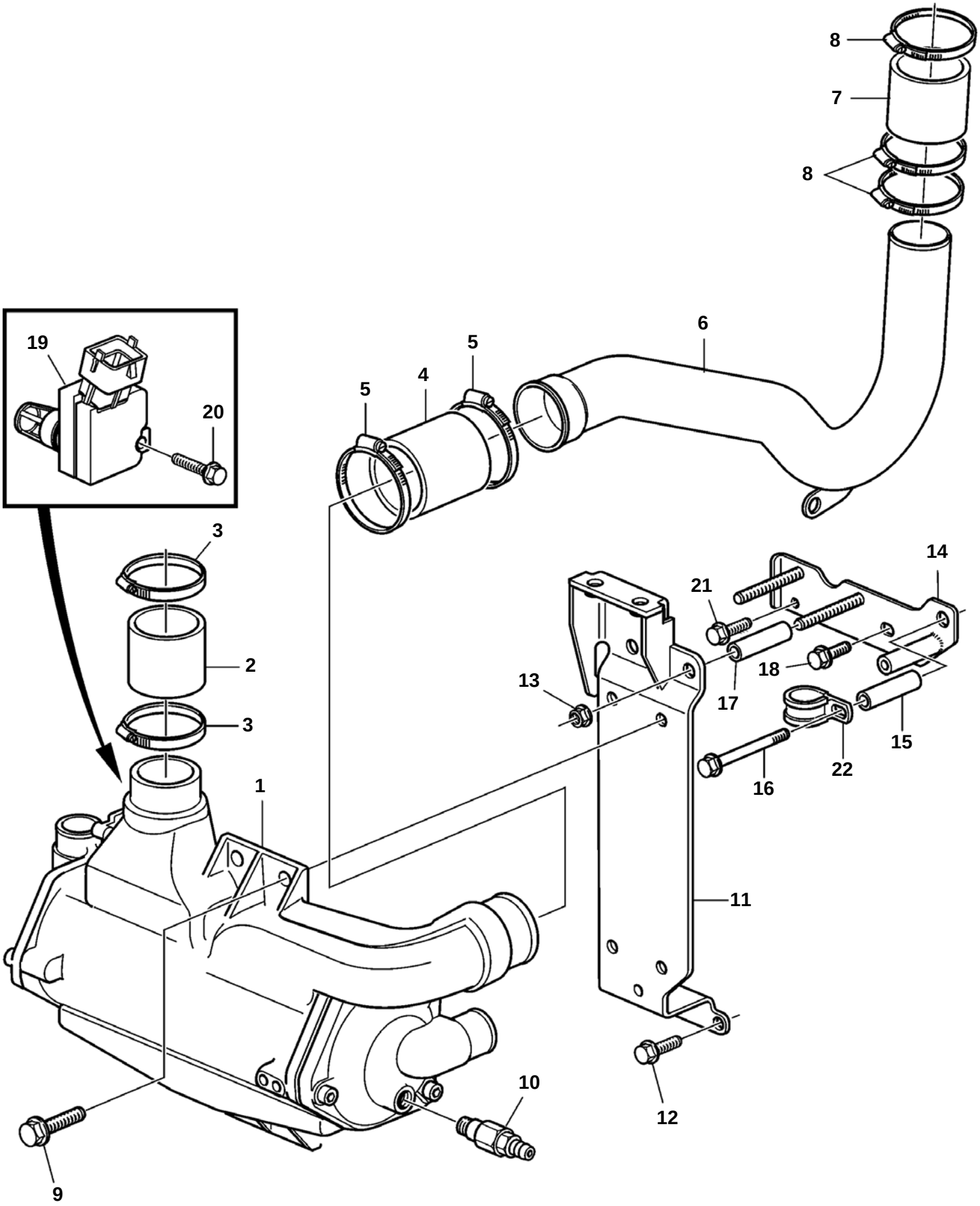

D3-190A-B, D3-190I-B, D3-190A-C, D3-190I-C

REF	PART NO.	QTY	DESCRIPTION	SEE SEC.
1	3812610	1	Intercooler	
				9629
2	30677765	1	Hose	
3	943480	2	Clamp	
4	470464	1	Hose, turbo	
5	943480	2	Clamp	
6	3886206	1	Charge air pipe	
7	847385	1	Hose	
8	943479	3	Hose clamp	
9	946671	4	Flange screw	
10	949918	1	Drain cock	
11	3819388	1	Bracket	
12	981177	2	Flange screw	
13	945408	2	Flange nut	
14	3819389	1	Bracket	
15	846425	1	Spacer sleeve	
16	965186	1	Flange screw	
17	858392	2	Sleeve	
18	947790	1	Flange screw	
19	30622083	1	Sender	
20	969408	1	Screw	
21	987428	1	Screw	
22	980614	1	Clamp	

D3-110I-A, D3-130A-A, D3-130I-A, D3-160A-A, D3-160I-A

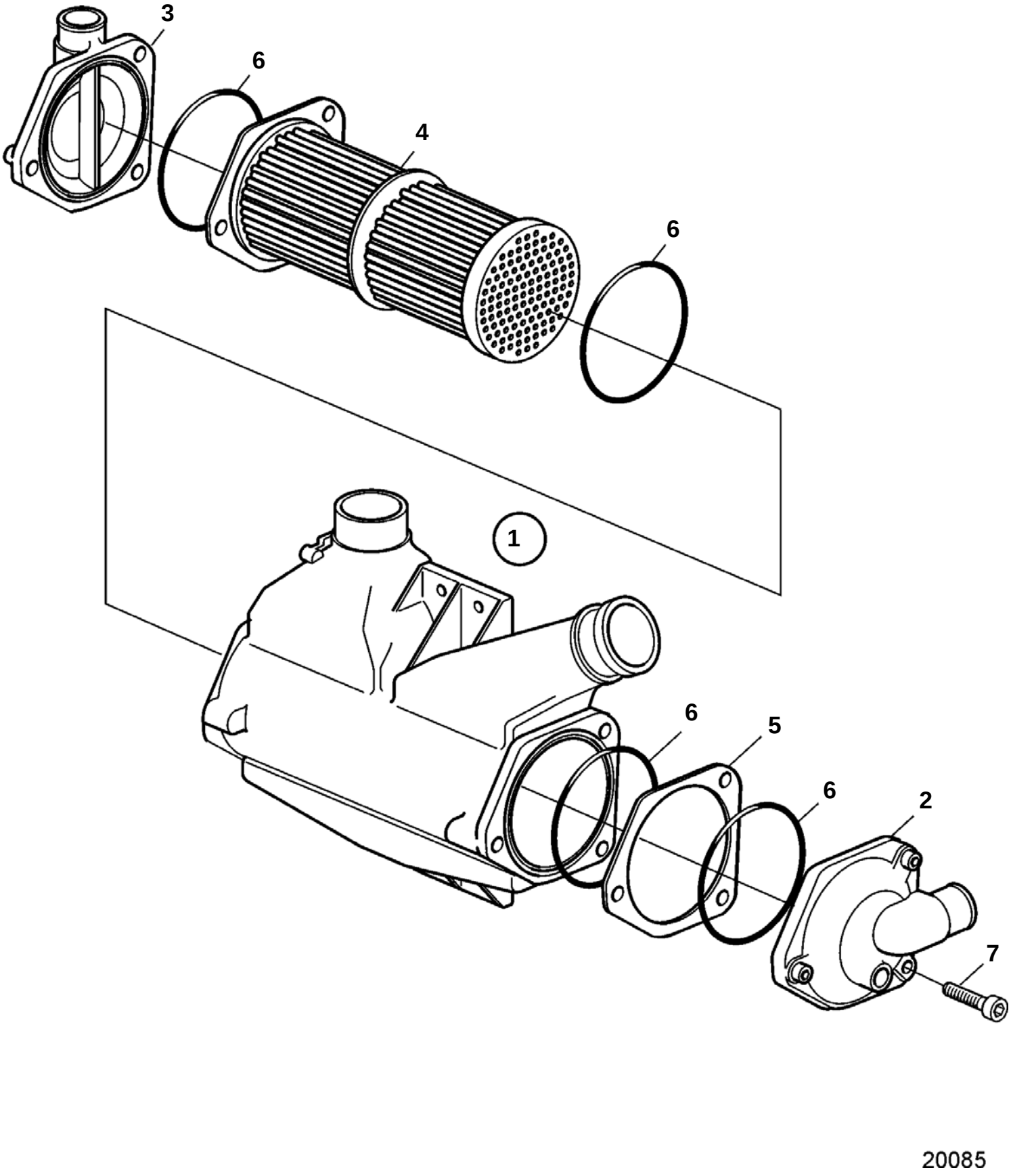

D3-110I-A, D3-130A-A, D3-130I-A, D3-160A-A, D3-160I-A

REF	PART NO.	QTY	DESCRIPTION
1	888513	1	Intercooler
2	3584337	1	· End cover
3	3584338	1	· End cover
4	3584336	1	· Insert
5	3580870	1	· Washer
6	3581070	4	O-ring
7	3838337	6	Screw

D3-110I-B, D3-110I-C, D3-130A-B, D3-130I-B, D3-130A-C, D3-130I-C, D3-160A-B, D3-160I-B, D3-160A-C, D3-160I-C

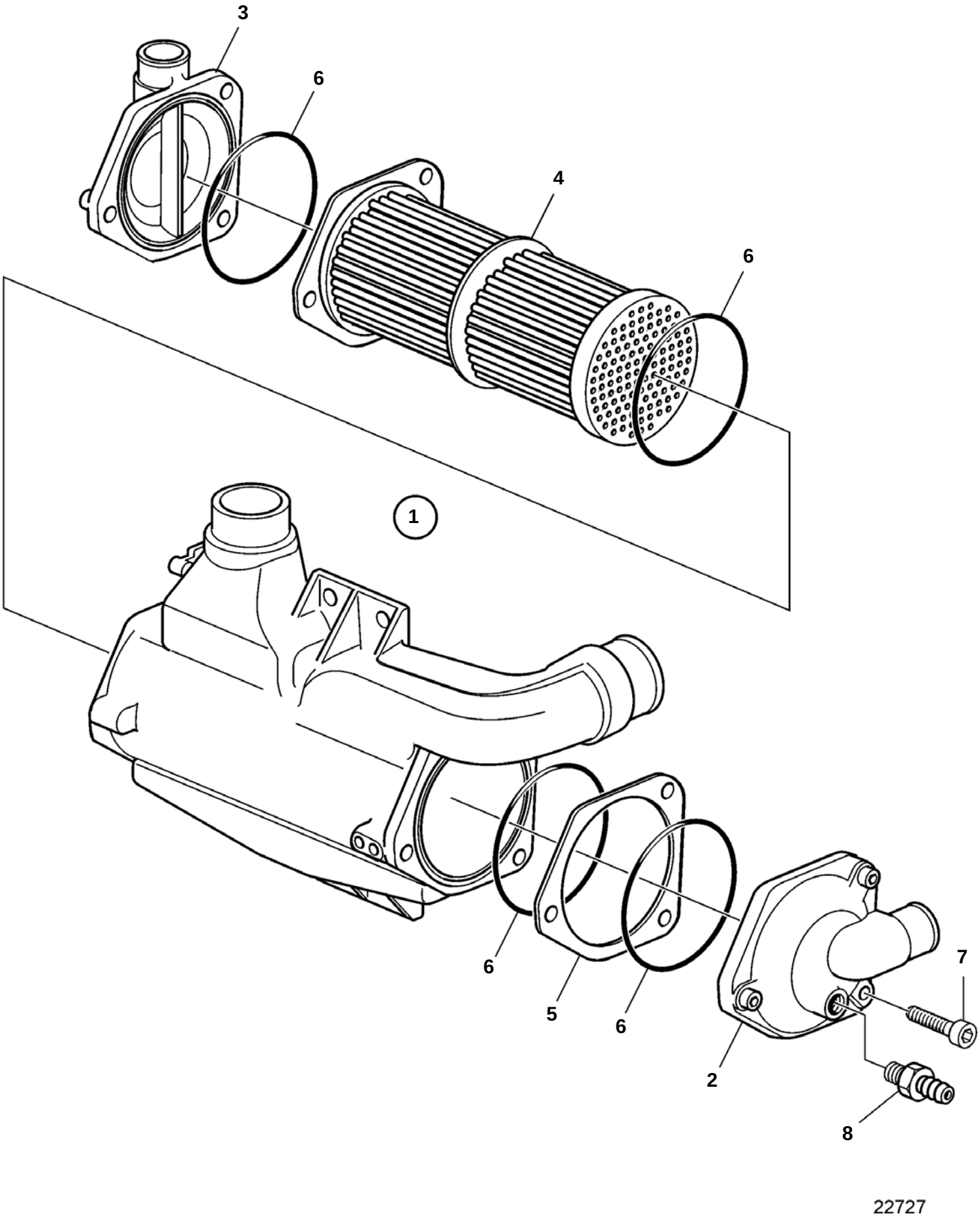

D3-110I-B, D3-110I-C, D3-130A-B, D3-130I-B, D3-130A-C, D3-130I-C, D3-160A-B, D3-160I-B, D3-160A-C, D3-160I-C

REF	PART NO.	QTY	DESCRIPTION
1	3819136	1	Intercooler
2	3584337	1	· End cover
3	3584338	1	· End cover
4	3840921	1	· Insert
5	3580870	1	· Washer
6	3581070	4	· O-ring
7	959224	6	· Screw
8	949918	1	Drain cock

D3-190A-B, D3-190I-B, D3-190A-C, D3-190I-C

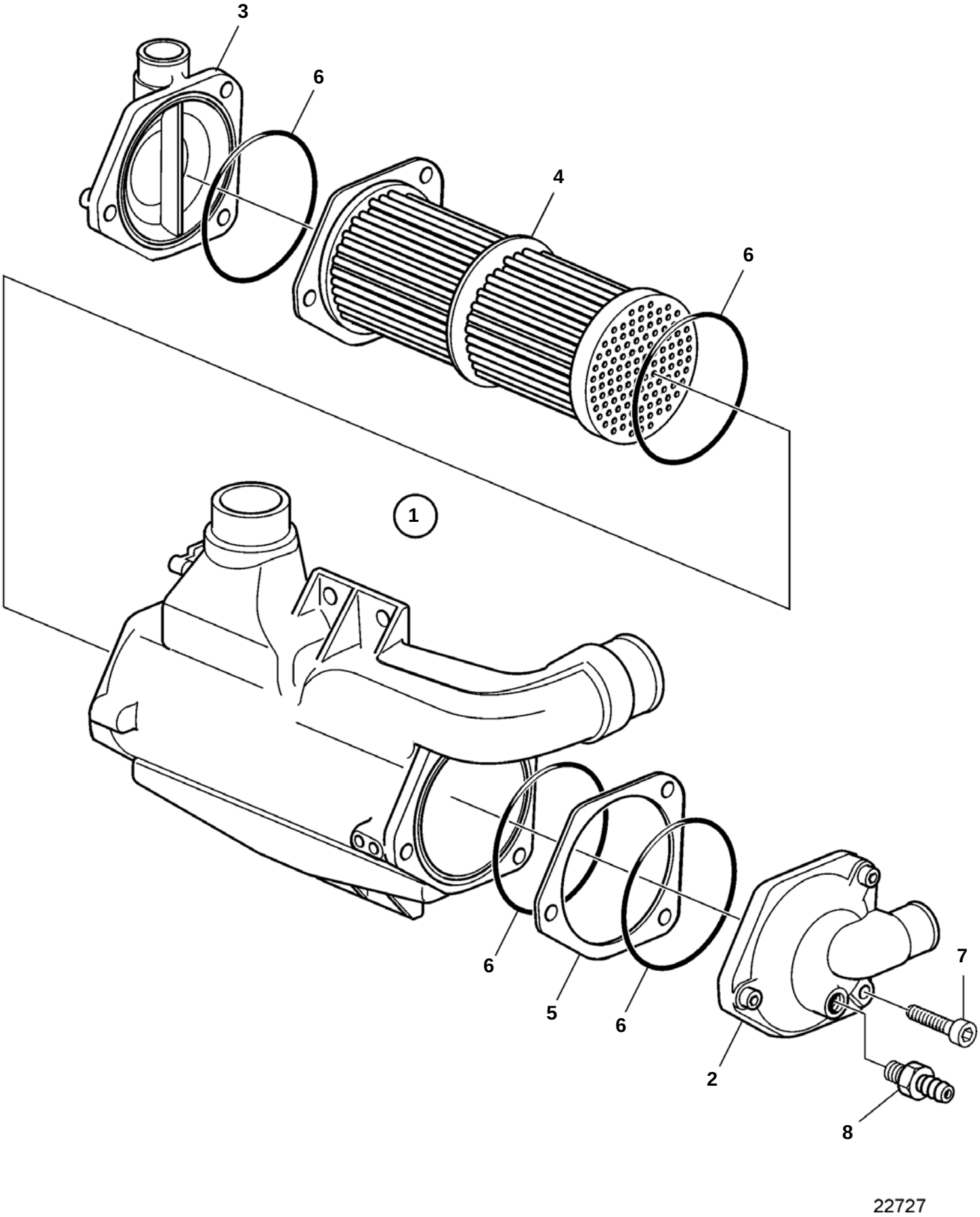

D3-190A-B, D3-190I-B, D3-190A-C, D3-190I-C

REF	PART NO.	QTY	DESCRIPTION
1	3812610	1	Intercooler
2	3584337	1	· End cover
3	3584338	1	· End cover
4	3840379	1	· Insert
5	3580870	1	· Washer
6	3581070	4	· O-ring
7	959224	6	· Screw
8	949918	1	Drain cock

D3-110I-A, D3-130A-A, D3-130I-A, D3-160A-A, D3-160I-A

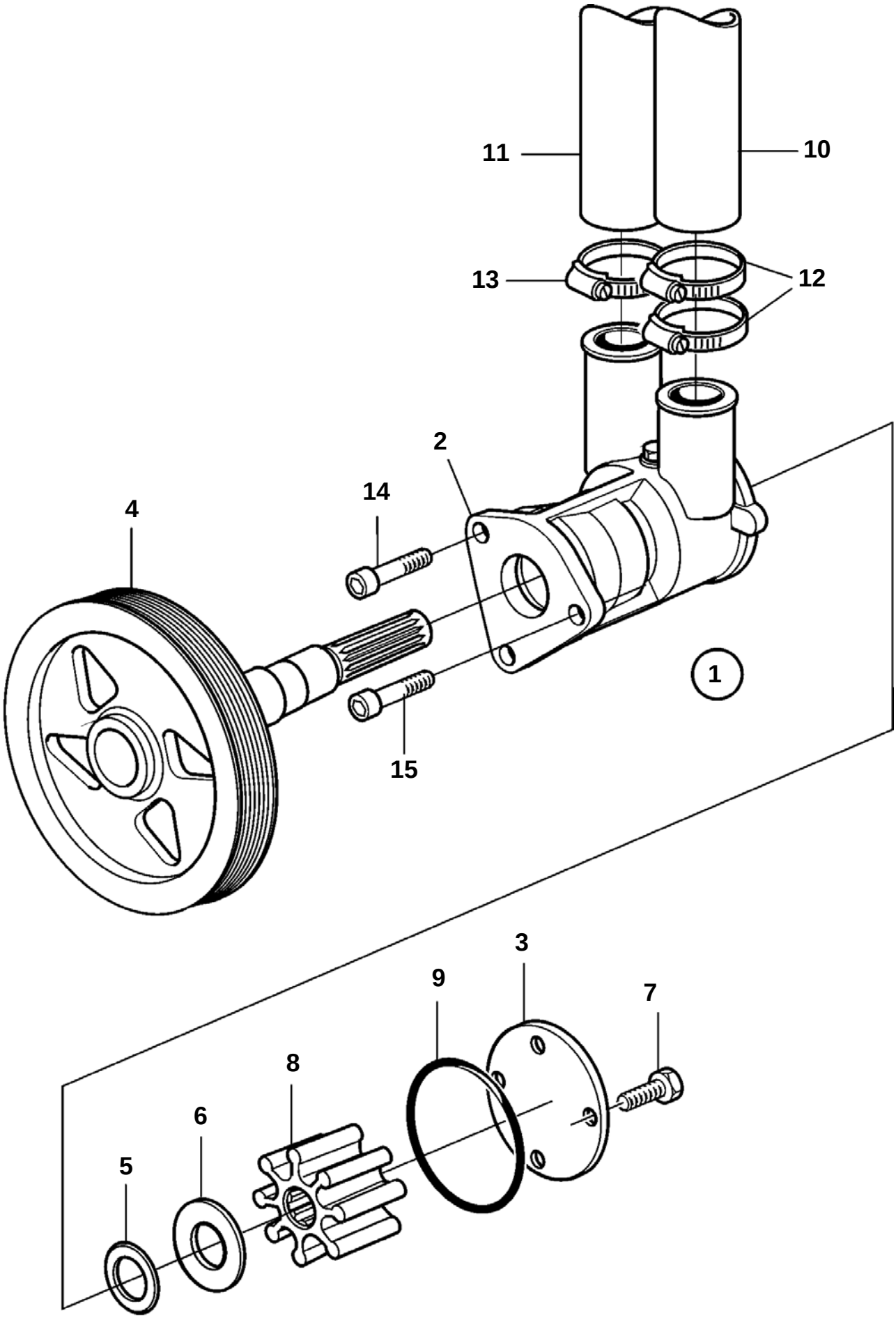

D3-110I-A, D3-130A-A, D3-130I-A, D3-160A-A, D3-160I-A

REF	PART NO.	QTY	DESCRIPTION	NOTES
1	3584343	1	Sea water pump	Replaced by kit 3884907.
2		1	· Housing	
3	3584353	1	· Cover	Included in Overhaul Kit for Sea Water Pump, 3588915
4		1	· Pulley	
5	3584349	1	· Sealing ring	Included in Overhaul Kit for Sea Water Pump, 3588915
6	827247	1	· Sealing ring	Included in Overhaul Kit for Sea Water Pump, 3588915
7	3584352	4	· Screw	Included in Overhaul Kit for Sea Water Pump, 3588915, M5x12mm
8		1	· Impeller	Included in Overhaul Kit for Sea Water Pump, 3588915, Included in Impeller Kit 3842786
9	3583809	1	· O-ring	Included in Overhaul Kit for Sea Water Pump, 3588915
10	3584356	1	Hose, Oil cooler	
11	3584355	1	Hose, heat exchanger	
12	961669	2	Hose clamp	
13	943477	1	Hose clamp	
14	959222	2	Screw	M8x25mm
15	959223	1	Screw	M8x30mm

D3-110I-B, D3-130I-B

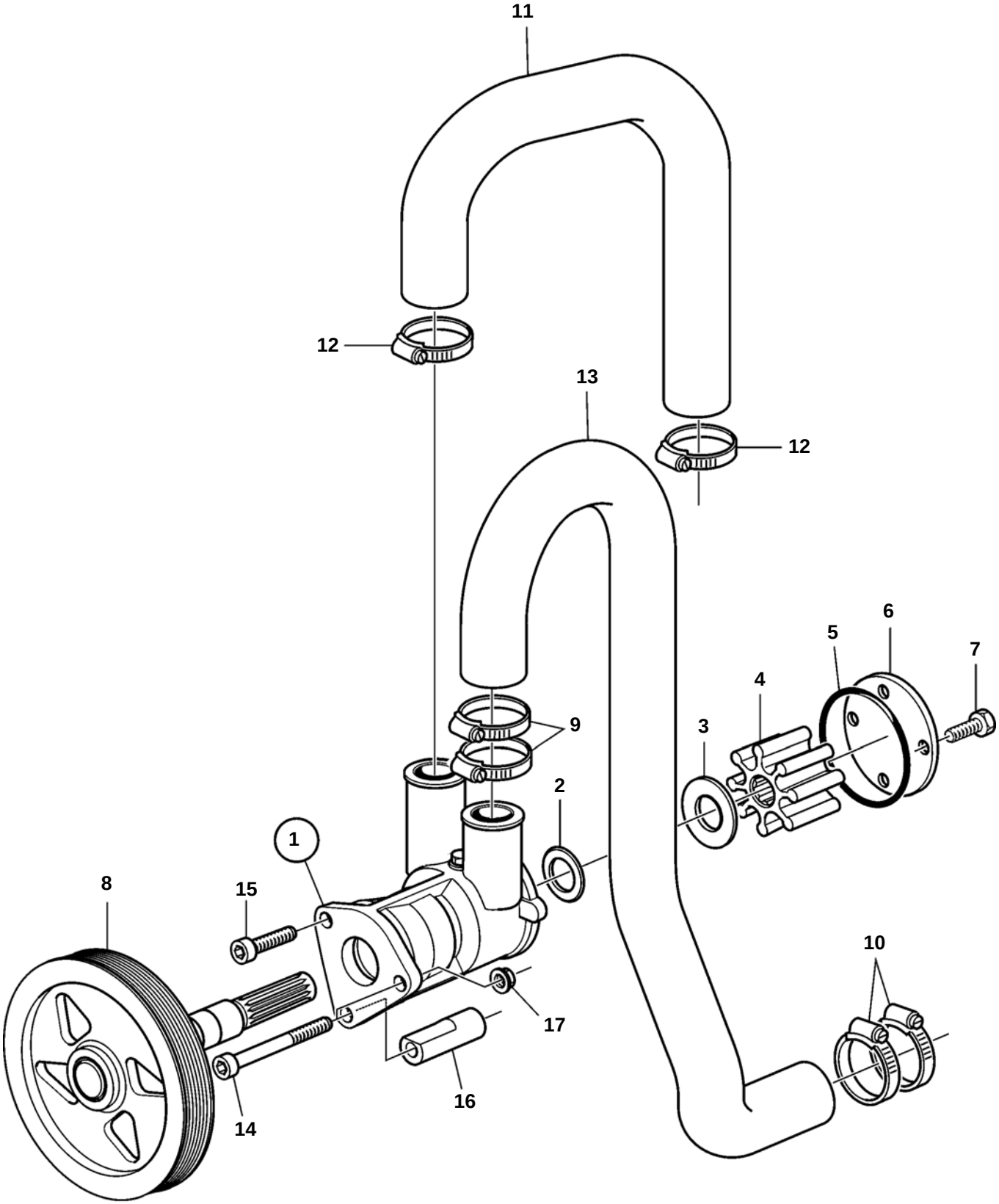

22776

D3-110I-B, D3-130I-B

REF	PART NO.	QTY	DESCRIPTION	NOTES
1	3884694	1	Sea water pump	
2	3584349	1	· Sealing ring	Included in Overhaul Kit for Sea Water Pump, 3588915
3	827247	1	· Sealing ring	Included in Overhaul Kit for Sea Water Pump, 3588915
4		1	· Impeller	Included in Impeller Kit 3842786, Included in Overhaul Kit for Sea Water Pump, 3588915
5	3583809	1	· O-ring	Included in Impeller Kit 3842786, Included in Overhaul Kit for Sea Water Pump, 3588915
6	3584353	1	· Cover	Included in Overhaul Kit for Sea Water Pump, 3588915
7	3584352	4	· Screw	Included in Overhaul Kit for Sea Water Pump, 3588915
8		1	· Pulley	
9	961669	2	Hose clamp	
10	961670	2	Hose clamp	
11	3584355	1	Hose, heat exchanger	
12	943477	2	Hose clamp	
13	3584356	1	Hose	
14	959227	2	Screw	
15	959222	1	Screw	
16	3884647	1	Spacer	
17	945408	1	Flange nut	

D3-110I-C, D3-130I-C, D3-160I-B, D3-160I-C, D3-190I-B, D3-190I-C

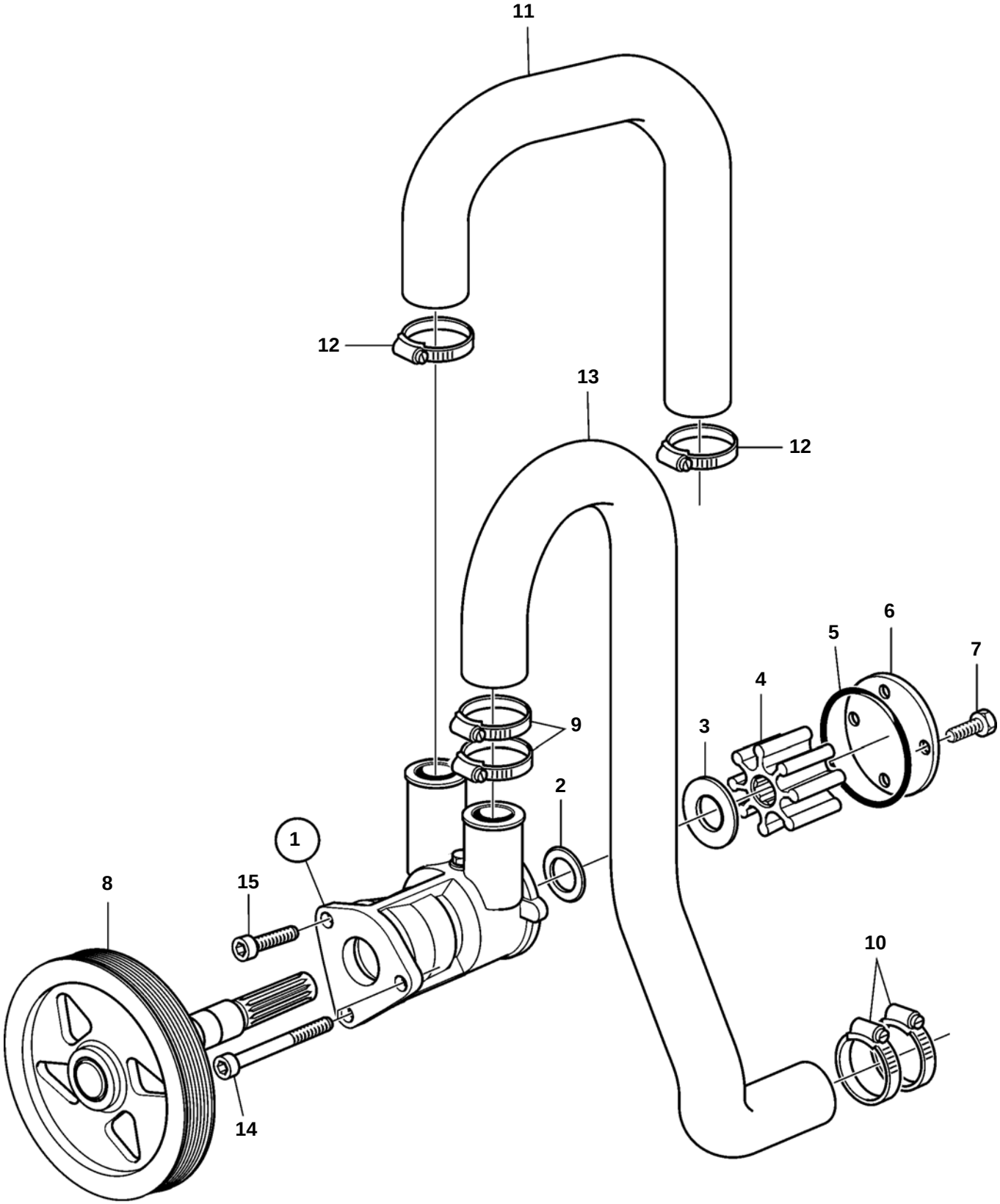

22777

D3-110I-C, D3-130I-C, D3-160I-B, D3-160I-C, D3-190I-B, D3-190I-C

REF	PART NO.	QTY	DESCRIPTION	NOTES
1	3884694	1	Sea water pump	
2	3584349	1	· Sealing ring	Included in Overhaul Kit for Sea Water Pump, 3588915
3	827247	1	· Sealing ring	Included in Overhaul Kit for Sea Water Pump, 3588915
4		1	· Impeller	Included in Impeller Kit 3842786, Included in Overhaul Kit for Sea Water Pump, 3588915
5	3583809	1	· O-ring	Included in Impeller Kit 3842786, Included in Overhaul Kit for Sea Water Pump, 3588915
6	3584353	1	· Cover	Included in Overhaul Kit for Sea Water Pump, 3588915
7	3584352	4	· Screw	Included in Overhaul Kit for Sea Water Pump, 3588915
8		1	· Pulley	
9	961669	2	Hose clamp	
10	961670	2	Hose clamp	
11	3584355	1	Hose, heat exchanger	
12	943477	2	Hose clamp	
13	3584356	1	Hose	
14	959227	2	Screw	
15	959222	1	Screw	

D3-130A-B

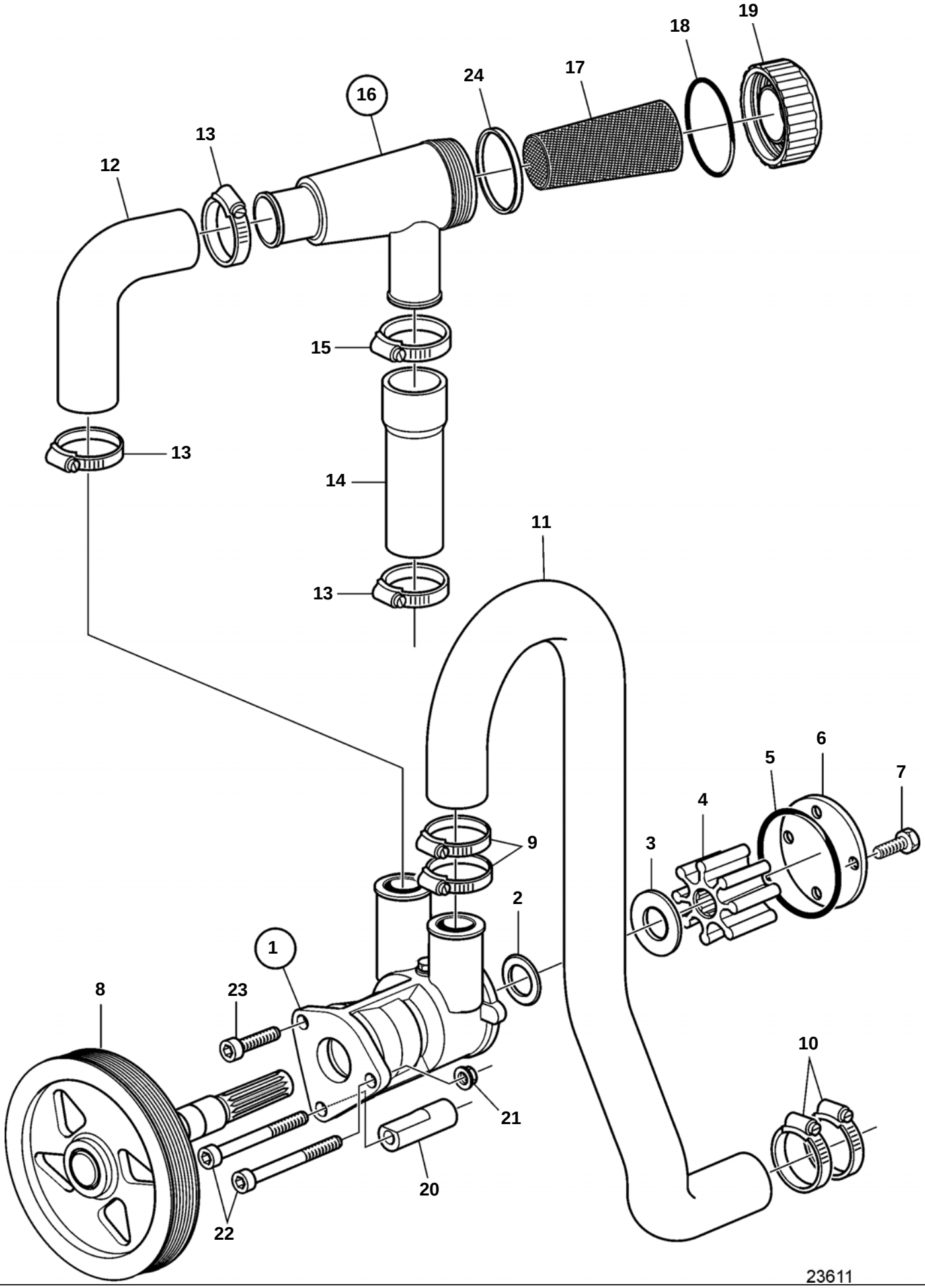

D3-130A-B

REF	PART NO.	QTY	DESCRIPTION	NOTES
1	3884694	1	Sea water pump	
2	3584349	1	· Sealing ring	Included in Overhaul Kit for Sea Water Pump, 3588915
3	827247	1	· Sealing ring	Included in Overhaul Kit for Sea Water Pump, 3588915
4		1	· Impeller	Included in Overhaul Kit for Sea Water Pump, 3588915, Included in Impeller Kit 3842786
5	3583809	1	· O-ring	Included in Impeller Kit 3842786, Included in Overhaul Kit for Sea Water Pump, 3588915
6	3584353	1	· Cover	Included in Overhaul Kit for Sea Water Pump, 3588915
7	3584352	4	· Screw	Included in Overhaul Kit for Sea Water Pump, 3588915
8		1	· Pulley	
9	961669	2	Hose clamp	
10	961670	2	Hose clamp	
11	3584355	1	Hose, heat exchanger	
12	3817382	1	Hose	
13	943477	3	Hose clamp	
14	3817383	1	Hose	
15	943479	1	Hose clamp	
16	3812612	1	Sea water filter	
17	3812613	1	· Filter	
18	925093	1	· O-ring	
19		1	· Cover	
20	3884647	1	Spacer	
21	945408	1	Flange nut	
22	959227	2	Screw	
23	959222	1	Screw	
24	1547254	1	Sealing ring	Earlier production.

D3-130A-C, D3-160A-B, D3-160A-C, D3-190A-B, D3-190A-C

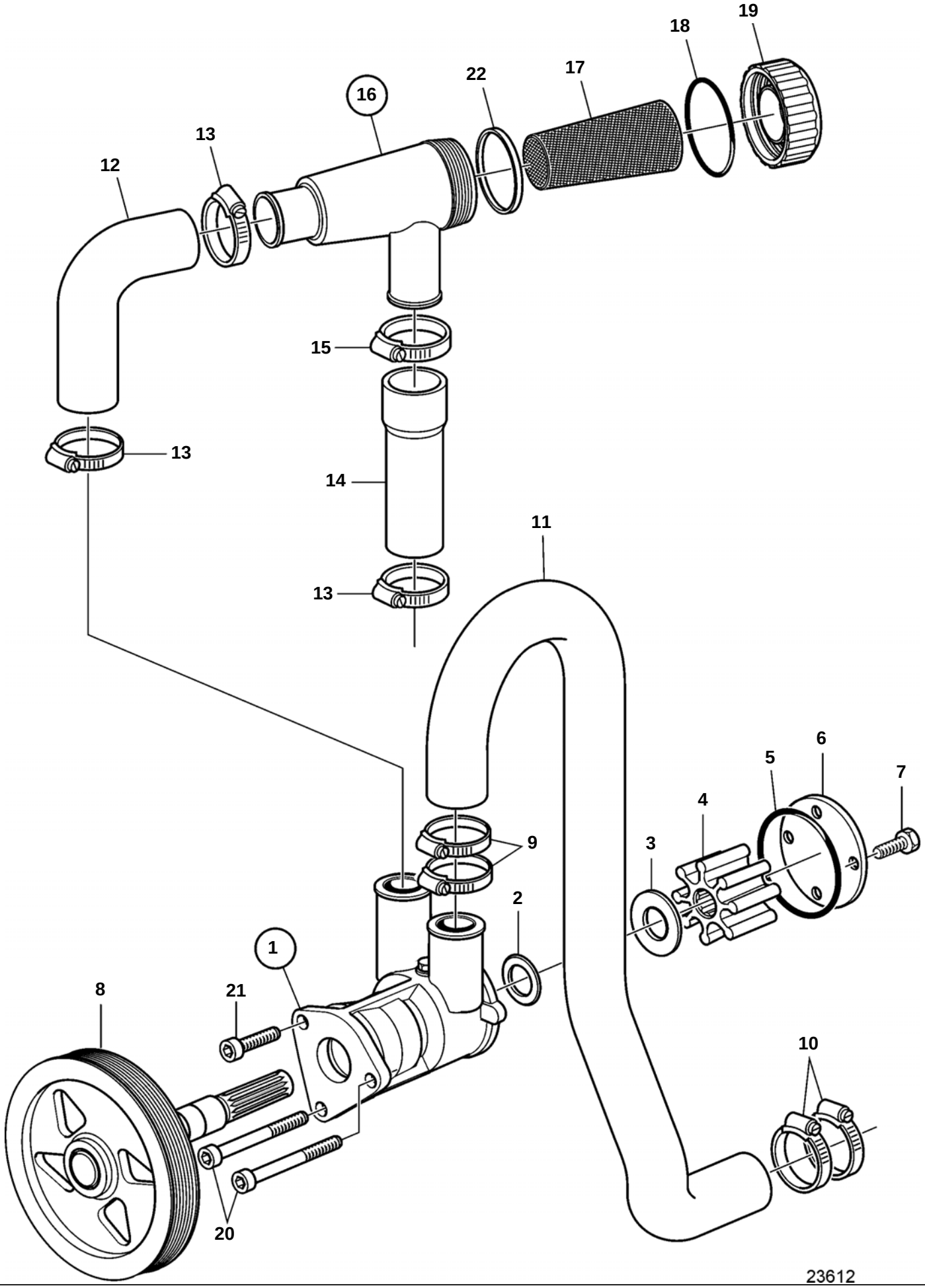

D3-130A-C, D3-160A-B, D3-160A-C, D3-190A-B, D3-190A-C

REF	PART NO.	QTY	DESCRIPTION	NOTES
1	3884694	1	Sea water pump	
2	3584349	1	· Sealing ring	Included in Overhaul Kit for Sea Water Pump, 3588915
3	827247	1	· Sealing ring	Included in Overhaul Kit for Sea Water Pump, 3588915
4		1	· Impeller	Included in Impeller Kit 3842786, Included in Overhaul Kit for Sea Water Pump, 3588915
5	3583809	1	· O-ring	Included in Overhaul Kit for Sea Water Pump, 3588915, Included in Impeller Kit 3842786
6	3584353	1	· Cover	Included in Overhaul Kit for Sea Water Pump, 3588915
7	3584352	4	· Screw	Included in Overhaul Kit for Sea Water Pump, 3588915
8		1	· Pulley	
9	961669	2	Hose clamp	
10	961670	2	Hose clamp	
11	3584355	1	Hose, heat exchanger	
12	3817382	1	Hose	
13	943477	3	Hose clamp	
14	3817383	1	Hose	
15	943479	1	Hose clamp	
16	3812612	1	Sea water filter	
17	3812613	1	· Filter	
18	925093	1	· O-ring	
19		1	· Cover	
20	959227	2	Screw	
21	959222	1	Screw	
22	1547254	1	Sealing ring	Earlier production.

D3-110I-A, D3-130A-A, D3-130I-A, D3-160A-A, D3-160I-A

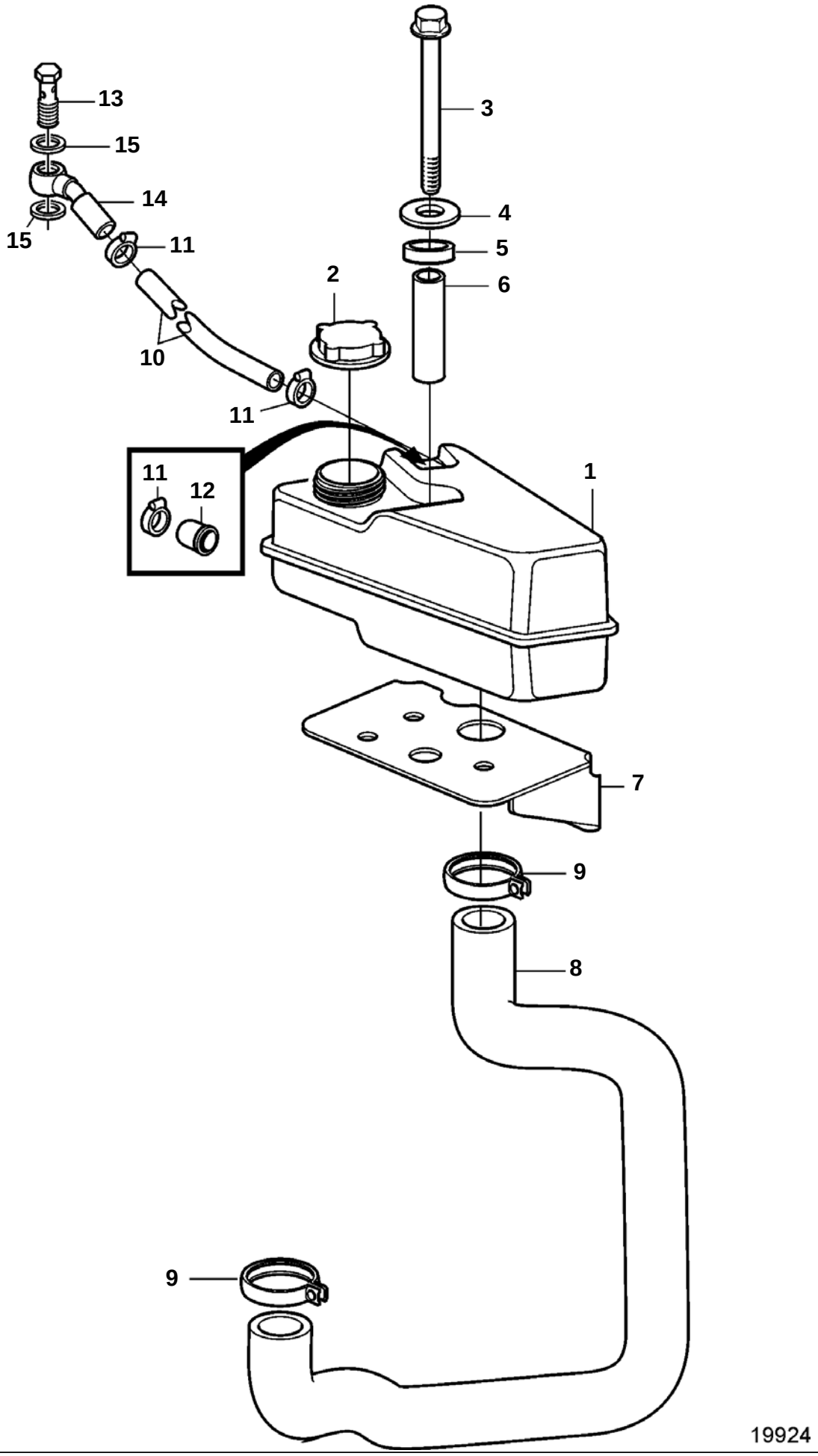

D3-110I-A, D3-130A-A, D3-130I-A, D3-160A-A, D3-160I-A

REF	PART NO.	QTY	DESCRIPTION	NOTES
1	3580941	1	Expansion tank	
2	9445462	1	Pressure cap	
3	968999	1	Screw	
4	976944	1	Washer	
5	3285120	1	Rubber ring	
6	3581032	1	Spacer sleeve	
7	3584325	1	Bracket	
8	3584326	1	Hose	
9	943474	2	Hose clamp	
10	942700	1	Hose	L=250mm
11	945652	3	Hose clamp	
12	1276516	1	Plug	
13	969299	1	Hollow screw	
14	858750	1	Banjo nipple	
15	11994	2	Gasket	

D3-110I-B, D3-110I-C, D3-130A-B, D3-130I-B, D3-130A-C, D3-130I-C, D3-160A-B, D3-160I-B, D3-160A-C, D3-160I-C, D3-190A-B, D3-190I-B, D3-190A-C, D3-190I-C

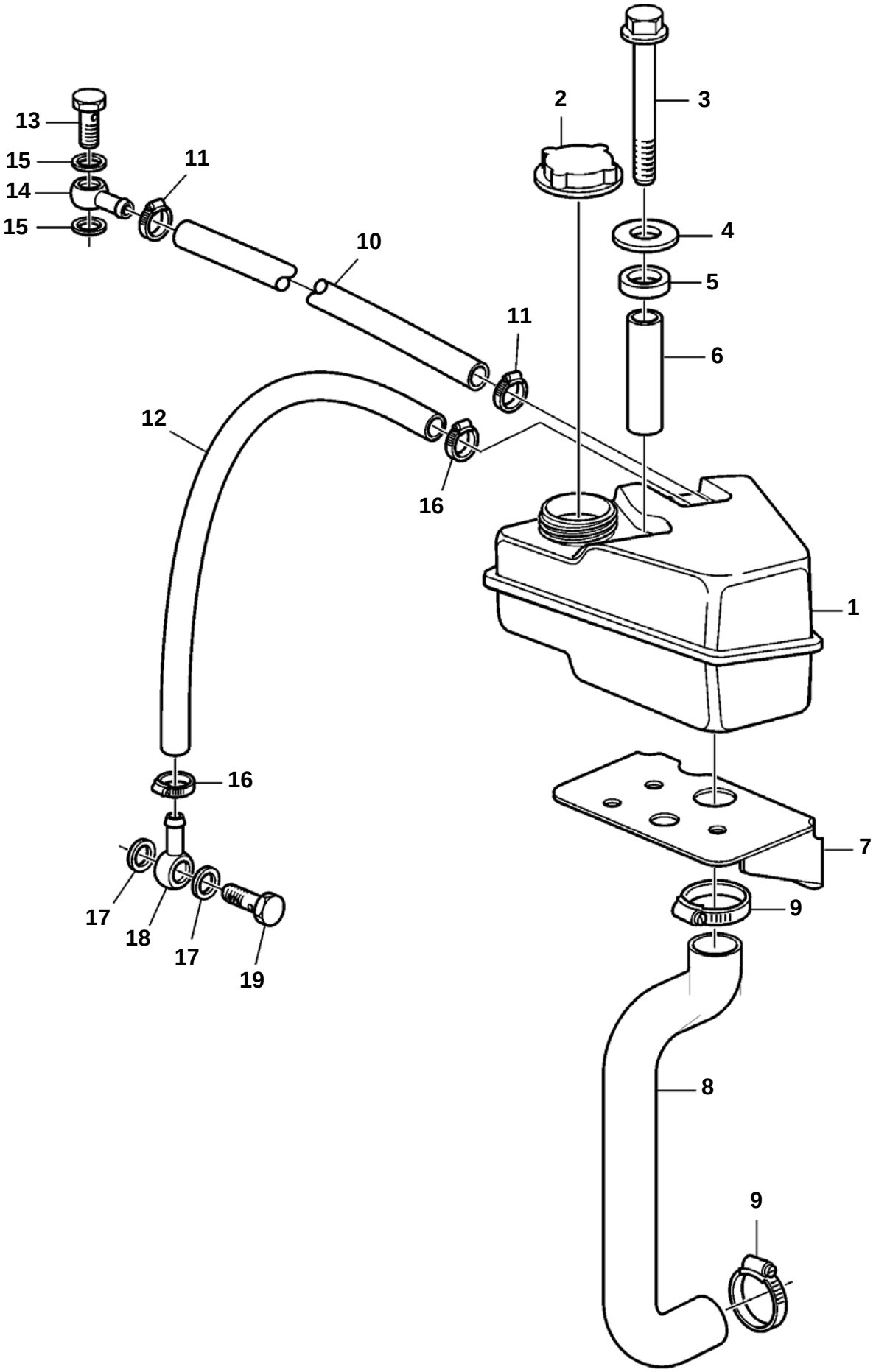

D3-110I-B, D3-110I-C, D3-130A-B, D3-130I-B, D3-130A-C, D3-130I-C, D3-160A-B, D3-160I-B, D3-160A-C, D3-160I-C, D3-190A-B, D3-190I-B, D3-190A-C, D3-190I-C

REF	PART NO.	QTY	DESCRIPTION	NOTES
1	3580941	1	Expansion tank	
2	9445462	1	Pressure cap	
3	968999	1	Screw	
4	976944	1	Washer	
5	3285120	1	Rubber ring	
6	3581032	1	Spacer sleeve	
7	3584325	1	Bracket	
8	3819125	1	Hose	
9	943474	2	Hose clamp	
10	942700	1	Hose	L=250mm
11	945652	2	Hose clamp	
12	942700	1	Hose	L=330mm
13	969299	1	Hollow screw	
14	858750	1	Banjo nipple	
15	11994	2	Gasket	
16	945652	2	Hose clamp	
17	11994	2	Gasket	
18	858750	1	Banjo nipple	
19	969299	1	Hollow screw	

D3-110I-A, D3-130A-A, D3-130I-A, D3-160A-A, D3-160I-A

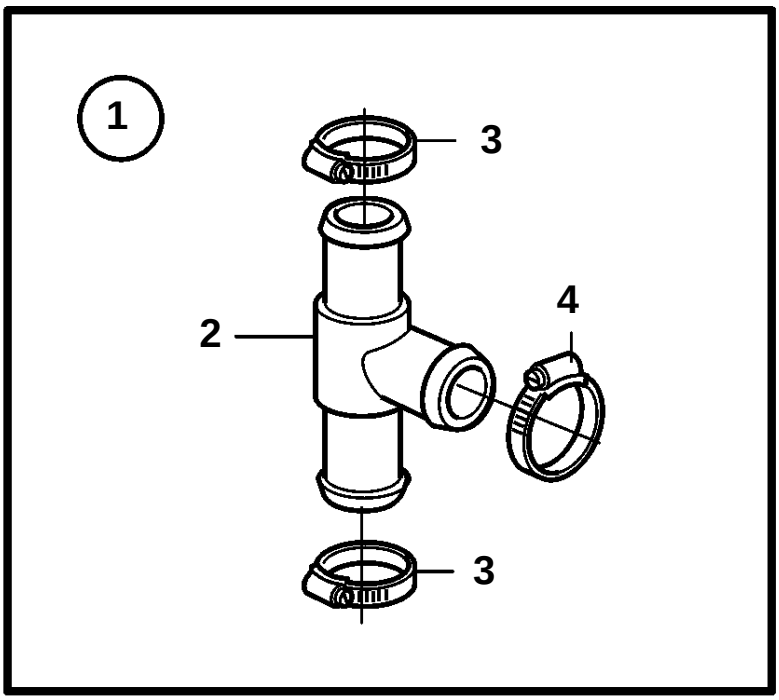

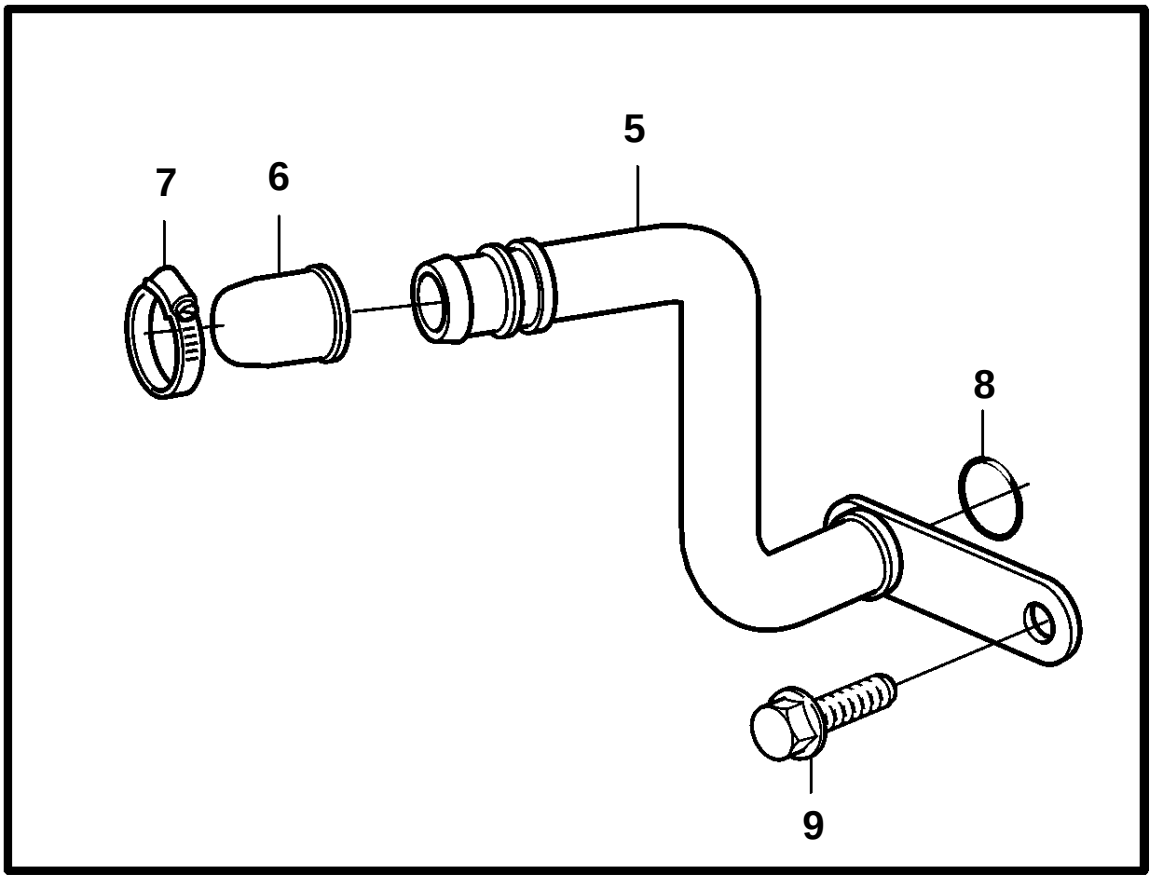

20026

D3-110I-A, D3-130A-A, D3-130I-A, D3-160A-A, D3-160I-A

REF	PART NO.	QTY	DESCRIPTION	NOTES
1	3588682	1	Hot water output kit	
2	3588519	1	· Connector	
3	961667	2	· Hose clamp	
4	961666	1	· Hose clamp	
5	30713691	1	Pipe	(6900069)
6	842235	1	Cap	
7	943472	1	Hose clamp	
8	982292	1	O-ring	
9	968813	1	Flange screw	

Hot Water Outlet

D3-110I-B, D3-110I-C, D3-130A-B, D3-130I-B, D3-130A-C, D3-130I-C, D3-160A-B, D3-160I-B, D3-160A-C, D3-160I-C, D3-190A-B, D3-190I-B, D3-190A-C, D3-190I-C

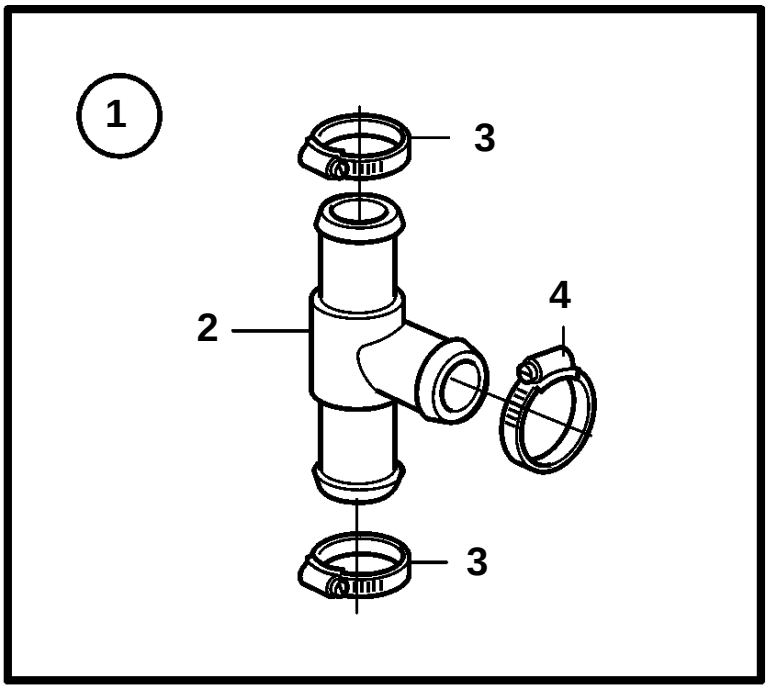

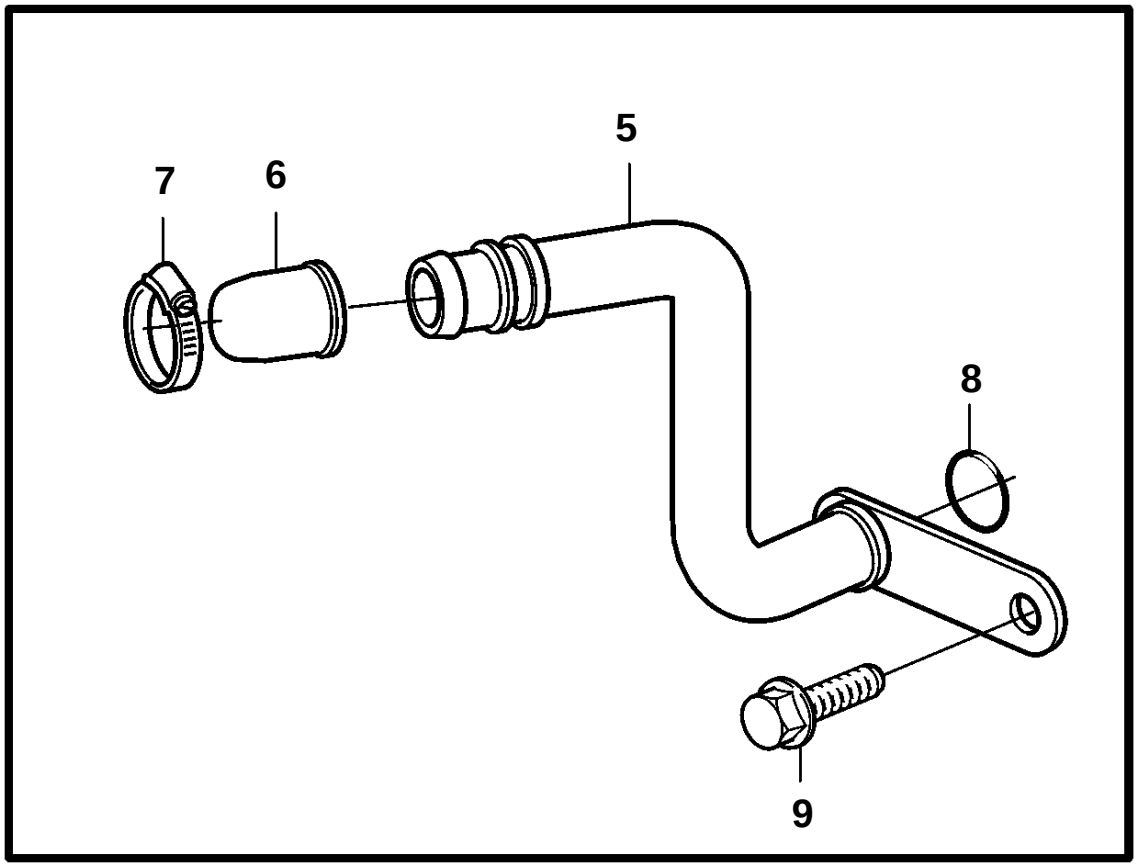

20026

D3-110I-B, D3-110I-C, D3-130A-B, D3-130I-B, D3-130A-C, D3-130I-C, D3-160A-B, D3-160I-B, D3-160A-C, D3-160I-C, D3-190A-B, D3-190I-B, D3-190A-C, D3-190I-C

REF	PART NO.	QTY	DESCRIPTION
1	3588682	1	Hot water output kit
2	3588519	1	· Connector
3	961667	2	· Hose clamp
4	961666	1	· Hose clamp
5	8692678	1	Tube
6	842235	1	Cap
7	943472	1	Hose clamp
8	982292	1	O-ring
9	968813	1	Flange screw

D3-110I-A, D3-110I-B, D3-110I-C, D3-130I-A, D3-130I-B, D3-130I-C, D3-160I-A, D3-160I-B, D3-160I-C, D3-190I-B, D3-190I-C

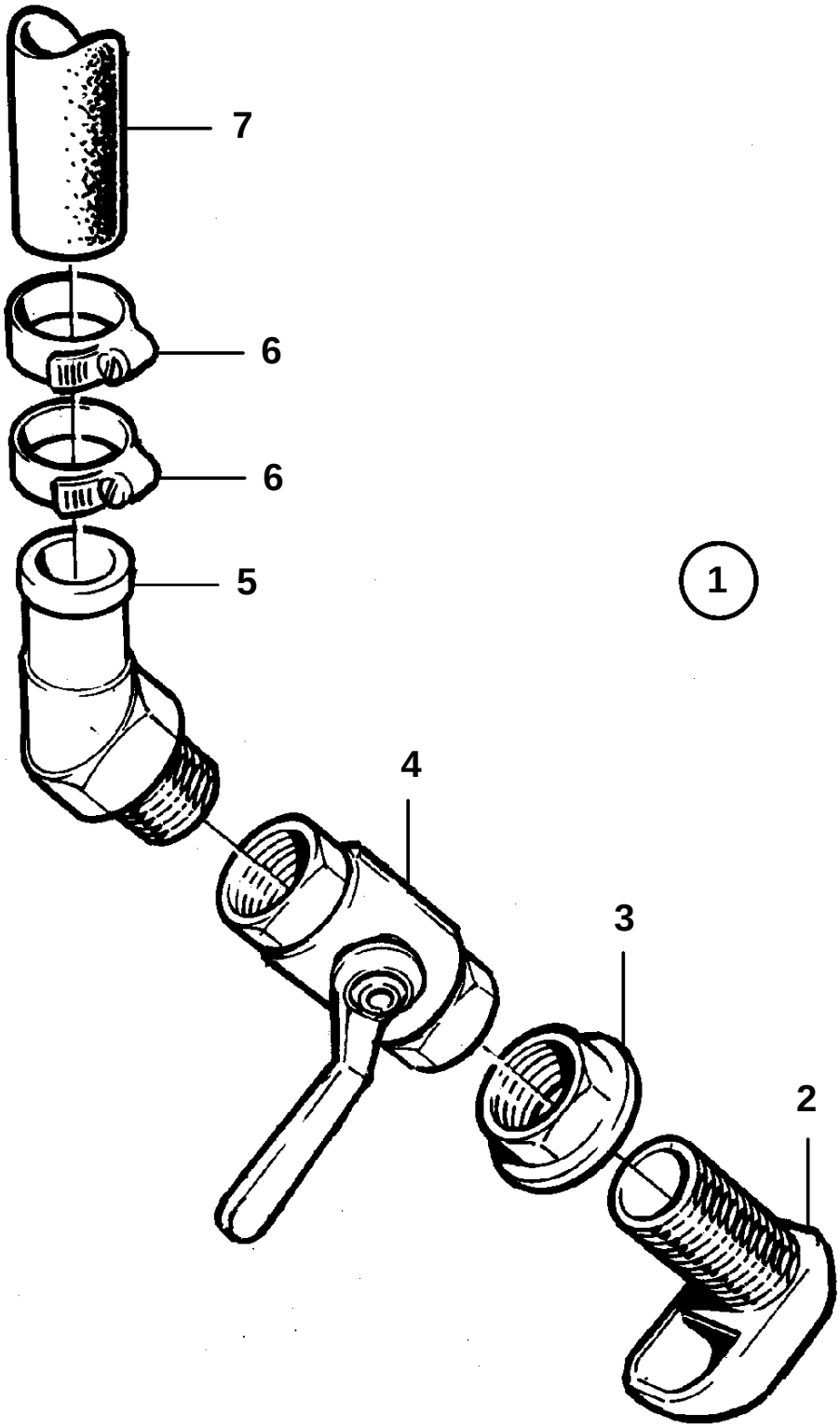

20086

D3-110I-A, D3-110I-B, D3-110I-C, D3-130I-A, D3-130I-B, D3-130I-C, D3-160I-A, D3-160I-B, D3-160I-C, D3-190I-B, D3-190I-C

REF	PART NO.	QTY	DESCRIPTION	NOTES
1	1140129	1	Cooling wate inlet	D=32mm
2	836876	1	· Strainer	
3	836879	1	· Nut	
4	1140125	1	· Ball valve	
5	828696	1	· Hose attachment	45°
6	961667	X	Hose clamp	
7	1140664	X	Exhaust hose	

D3-110I-A, D3-130A-A, D3-130I-A, D3-160A-A, D3-160I-A

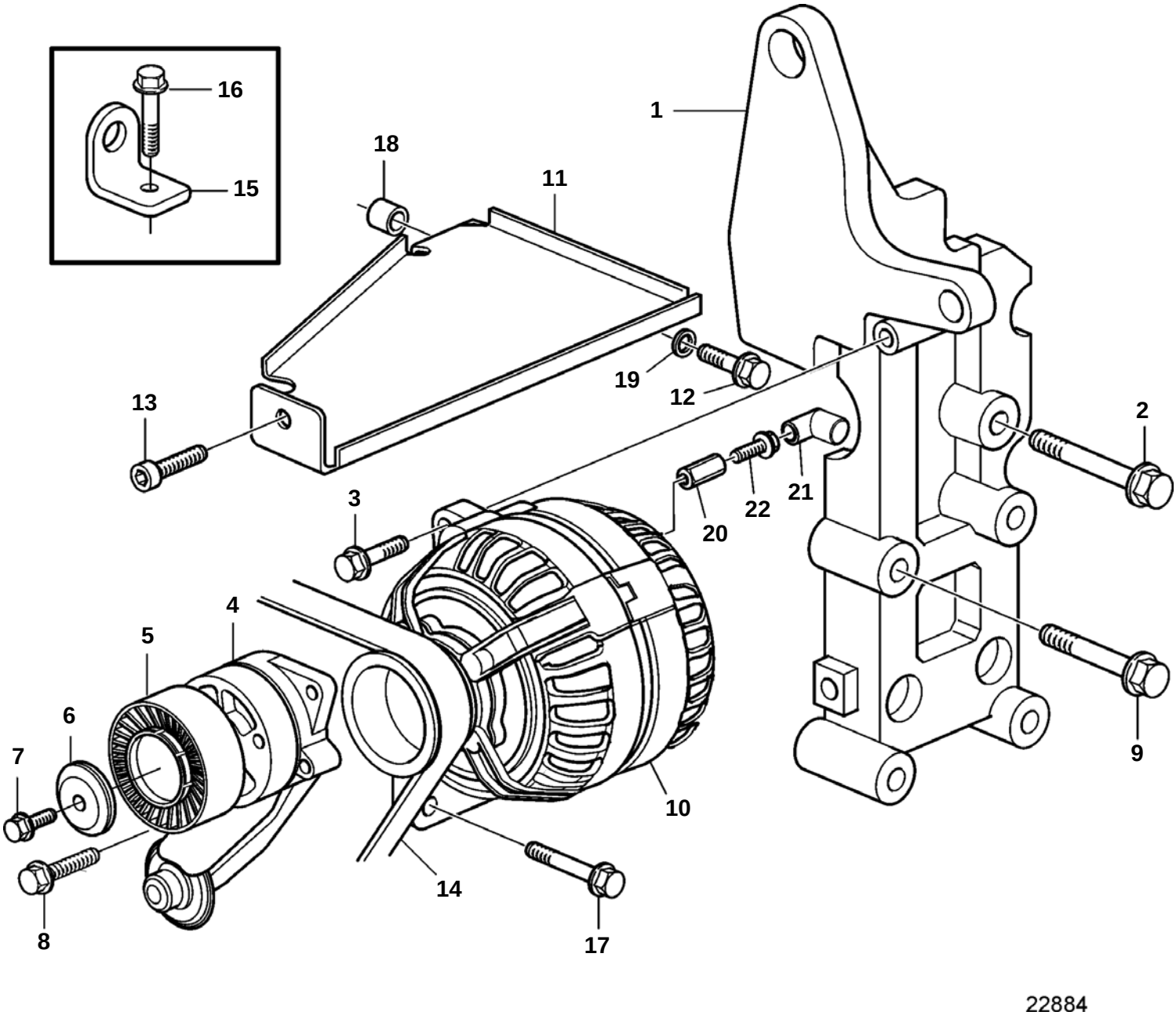

D3-110I-A, D3-130A-A, D3-130I-A, D3-160A-A, D3-160I-A

REF	PART NO.	QTY	DESCRIPTION	NOTES
1	30757168	1	Bracket	(8642196)
2	965182	2	Flange screw	M8x80mm
3	965180	1	Flange screw	M8x60mm
4	30757056	1	Belt tensioner	(30637961)
5	30729939	1	Pulley	
6	8653140	1	Cover	
7	984012	1	Flange screw	
8	983028	3	Flange screw	M8x35mm
9	983028	1	Flange screw	M8x35mm
10	3803645	1	Alternator,exch	140A
11	3584444	1	Protecting plate	
12	968842	1	Flange screw	
13	959223	1	Screw	
14	30731809	1	Drive belt	(8627228)
15	3840565	1	Lifting eye, rear	
16	965188	1	Screw	
17	947760	2	Flange screw	M8x40mm
18	826652	1	Spacer sleeve	
19	980935	1	Spacer sleeve	
20	855314	1	Nut	
21	855798	1	Protecting sleeve	
22	947107	1	Flange screw	

D3-110I-B, D3-130A-B, D3-130I-B

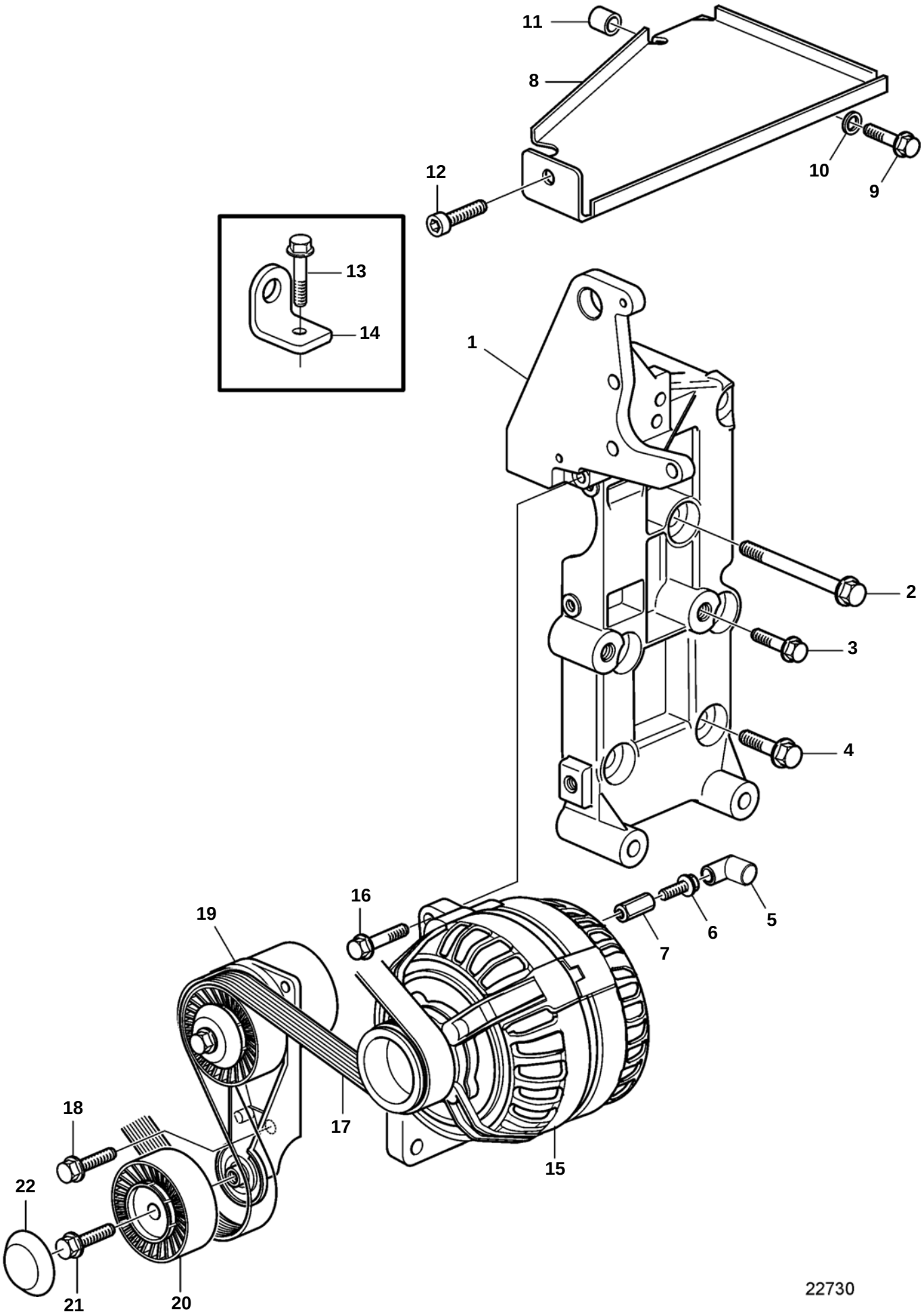

D3-110I-B, D3-130A-B, D3-130I-B

REF	PART NO.	QTY	DESCRIPTION	NOTES
1	30757168	1	Bracket	(30757068)
2	965182	3	Flange screw	
3	984652	3	Flange screw	
4	984651	3	Flange screw	
5	855798	1	Protecting sleeve	
6	947107	1	Flange screw	
7	855314	1	Nut	
8	3884908	1	Protecting plate	
9	968842	1	Flange screw	
10	980935	1	Spacer sleeve	
11	826652	1	Spacer sleeve	
12	959223	1	Screw	
13	965188	1	Screw	
14	3840565	1	Lifting eye, rear	
15	3803645	1	Alternator,exch	140A
16	965180	1	Flange screw	
17	30731809	1	Drive belt	
18	983028	2	Flange screw	
19	30757056	1	Belt tensioner	SN-349808
	30757282	1	Belt tensioner, complete	SN349809-
20	30729939	1	Pulley	SN-349808
21	984012	1	Flange screw	SN-349808
22	8653140	1	Cover	SN-349808

D3-110I-C, D3-130A-C, D3-130I-C, D3-160A-B, D3-160I-B, D3-160A-C, D3-160I-C, D3-190A-B, D3-190I-B, D3-190A-C, D3-190I-C

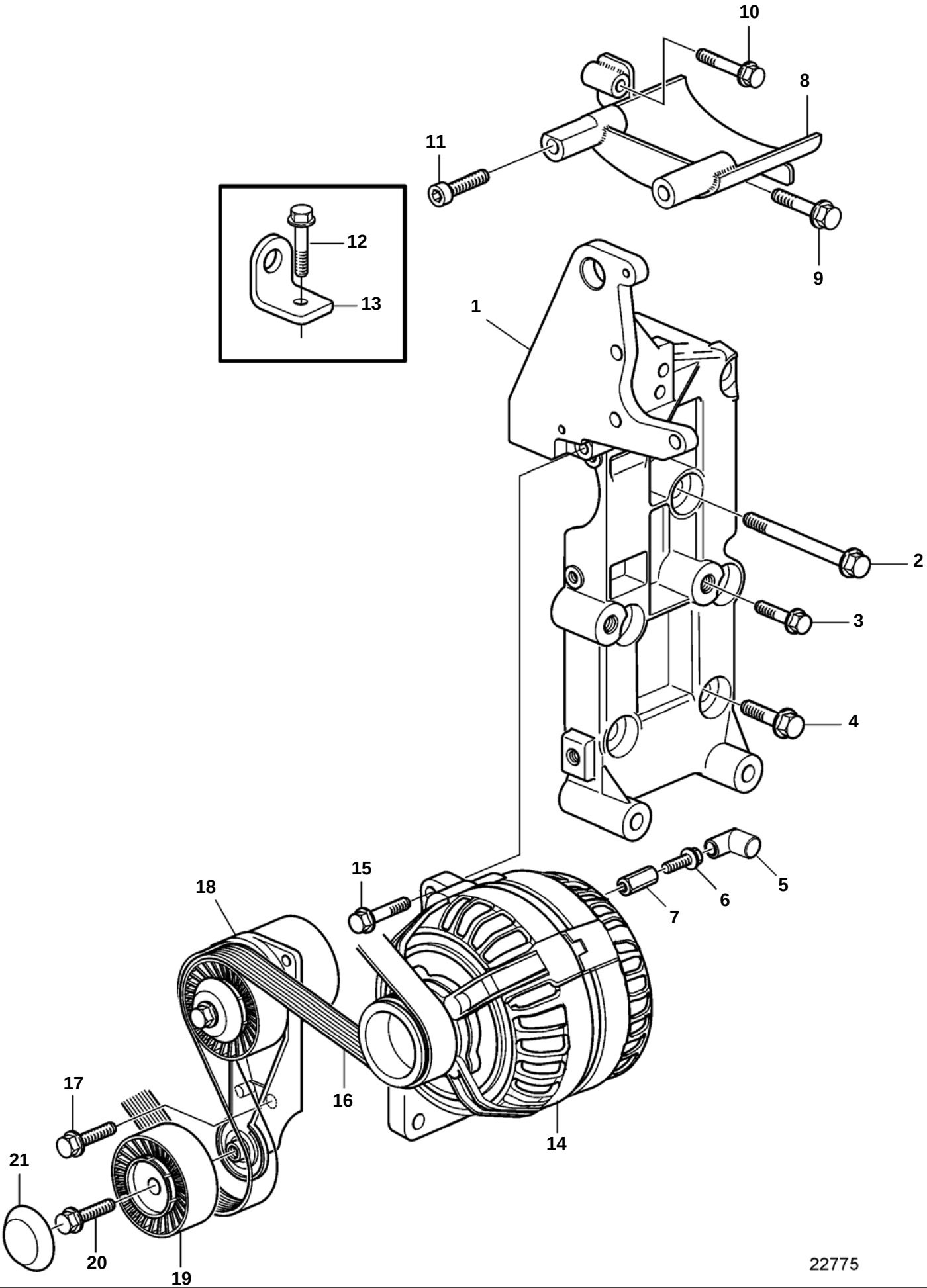

D3-110I-C, D3-130A-C, D3-130I-C, D3-160A-B, D3-160I-B, D3-160A-C, D3-160I-C, D3-190A-B, D3-190I-B, D3-190A-C, D3-190I-C

REF	PART NO.	QTY	DESCRIPTION	NOTES
1	30757168	1	Bracket	(30757068)
2	965182	3	Flange screw	
3	984652	3	Flange screw	
4	984651	3	Flange screw	
5	855798	1	Protecting sleeve	
6	947107	1	Flange screw	
7	855314	1	Nut	
8	3884643	1	Bracket	
9	968999	1	Screw	
10	984675	1	Screw	
11	947107	1	Flange screw	
12	965188	1	Screw	
13	3840565	1	Lifting eye, rear	
14	3803645	1	Alternator,exch	140A
15	965180	1	Flange screw	
16	30731809	1	Drive belt	
17	983028	2	Flange screw	
18	30757056	1	Belt tensioner	SN-349808
	30757282	1	Belt tensioner, complete	SN349809-
19	30729939	1	Pulley	SN-349808
20	984012	1	Flange screw	SN-349808
21	8653140	1	Cover	SN-349808

D3-110I-A, D3-110I-B, D3-110I-C, D3-130A-A, D3-130I-A, D3-130A-B, D3-130I-B, D3-130A-C, D3-130I-C, D3-160A-A, D3-160I-A, D3-160A-B, D3-160I-B, D3-160A-C, D3-160I-C, D3-190A-B, D3-190I-B, D3-190A-C, D3-190I-C

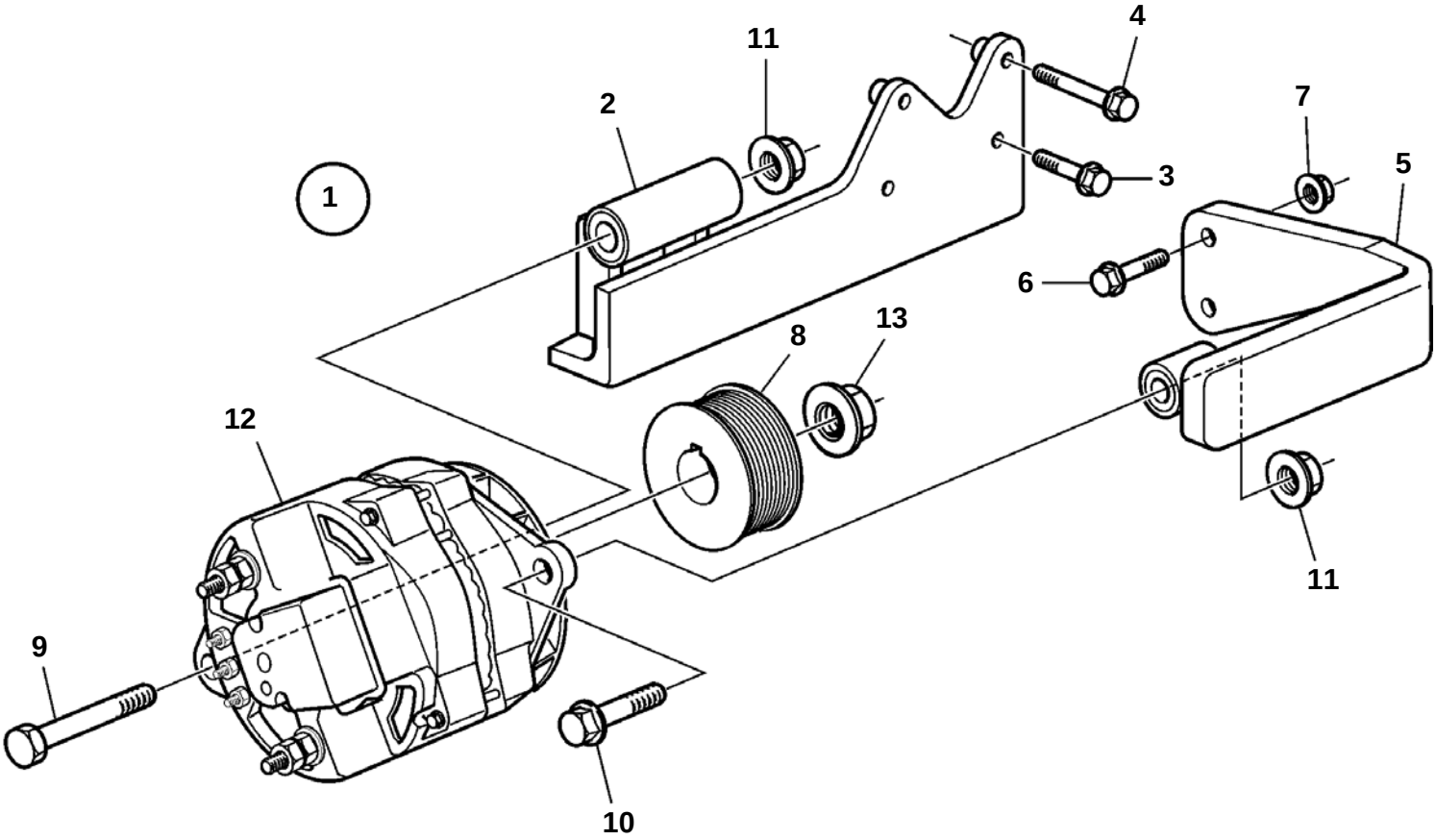

22699

D3-110I-A, D3-110I-B, D3-110I-C, D3-130A-A, D3-130I-A, D3-130A-B, D3-130I-B, D3-130A-C, D3-130I-C, D3-160A-A, D3-160I-A, D3-160A-B, D3-160I-B, D3-160A-C, D3-160I-C, D3-190A-B, D3-190I-B, D3-190A-C, D3-190I-C

REF	PART NO.	QTY	DESCRIPTION	SEE SEC.	NOTES
1	3841445	1	Mounting kit		
			· Bulletin P-32-1-2	P-32-1-2-EN	Extra Alternator Kit, D3 Engines
2	3818520	1	· Bracket		
3	984652	2	· Flange screw		L=50mm
4	973924	2	· Flange screw		L=90mm
5	3818523	1	· Bracket		
6	948217	2	· Flange screw		L=45mm
7	945408	2	· Flange nut		
8	3818325	1	· Pulley		
9	978447	1	· Flange screw		L=150mm
10	965194	1	· Screw		L=60mm
11	971096	2	· Nut		
12		1	Alternator		
13		1	Nut		

D3-110I-A, D3-110I-B, D3-110I-C, D3-130A-A, D3-130I-A, D3-130A-B, D3-130I-B, D3-130A-C, D3-130I-C, D3-160A-A, D3-160I-A, D3-160A-B, D3-160I-B, D3-160A-C, D3-160I-C, D3-190A-B, D3-190I-B, D3-190A-C, D3-190I-C

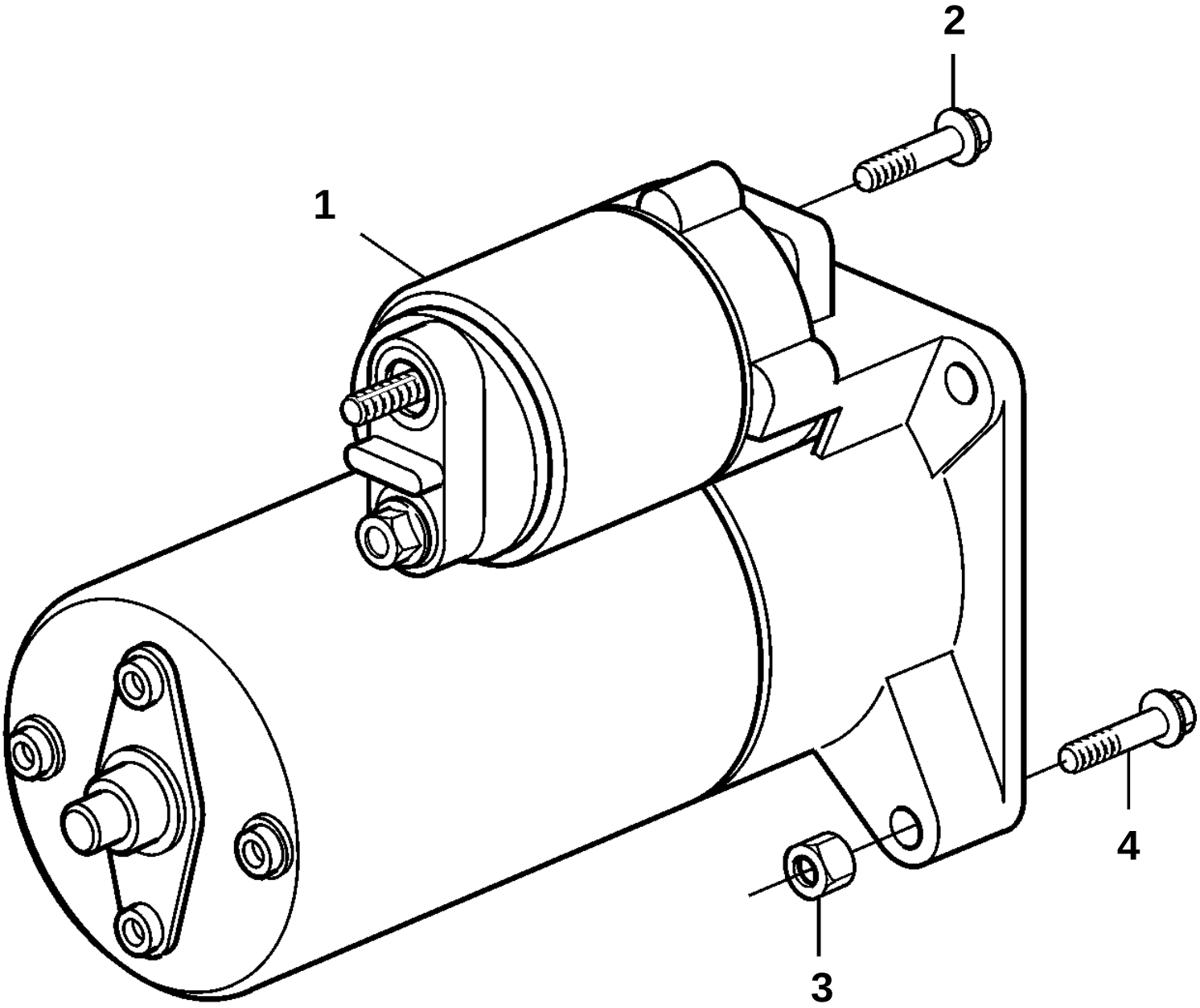

19910

D3-110I-A, D3-110I-B, D3-110I-C, D3-130A-A, D3-130I-A, D3-130A-B, D3-130I-B, D3-130A-C, D3-130I-C, D3-160A-A, D3-160I-A, D3-160A-B, D3-160I-B, D3-160A-C, D3-160I-C, D3-190A-B, D3-190I-B, D3-190A-C, D3-190I-C

REF	PART NO.	QTY	DESCRIPTION	NOTES
1	3803646	1	Starter motor, exch	
2	965185	1	Flange screw	M10x40mm
3	983716	1	Nut	
4	965186	1	Flange screw	M10x50mm

D3-110I-A, D3-130A-A, D3-130I-A, D3-160A-A, D3-160I-A

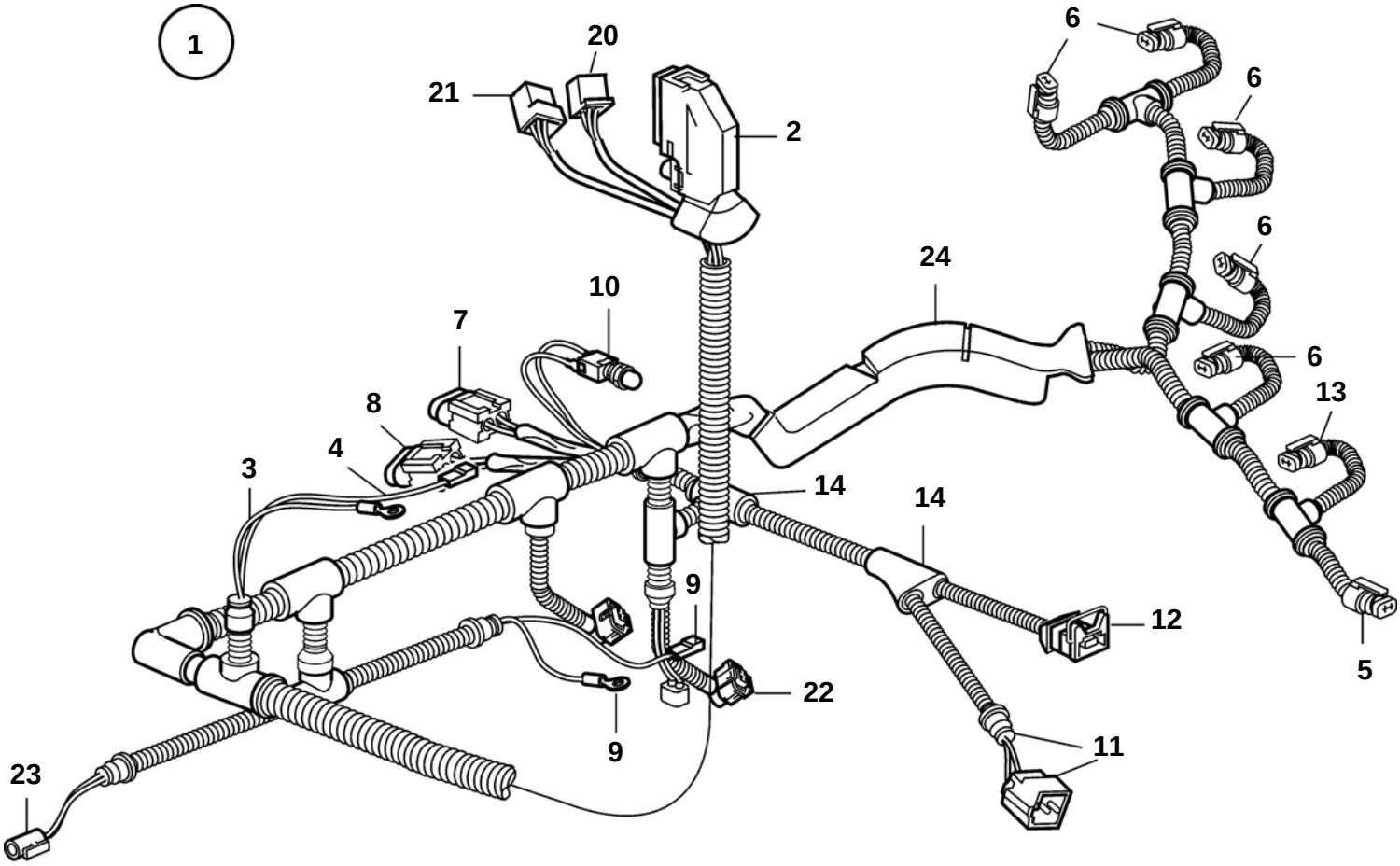

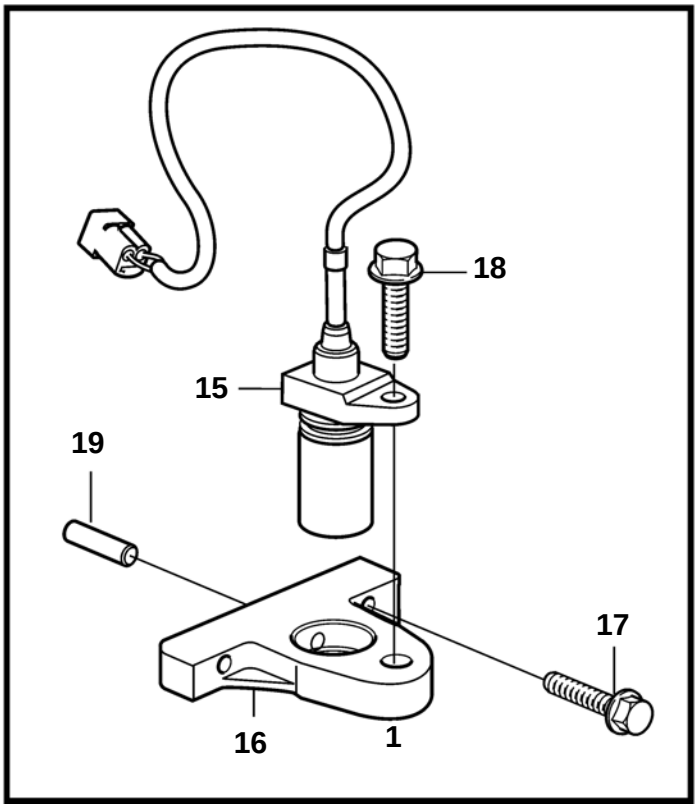

20042

D3-110I-A, D3-130A-A, D3-130I-A, D3-160A-A, D3-160I-A

REF	PART NO.	QTY	DESCRIPTION	NOTES
1	881978	1	Wiring harness	
2	9187012	1	· Clip	
3	970798	1	· Cable terminal, alternator	
4	949597	1	Housing, alternator	
	973121	1	Cable terminal, alternator	
5	888693	1	Adapter, fuel pump	Included in Cable Harness 881978
6	888690	5	Adapter, fuel injector	Included in Cable Harness 881978
7		1	Fuse holder	
	874220	1	Cable terminal	
		1	Seal	
	873854	1	Sealing sleeve	
	978999	1	Fuse	
8		1	Fuse holder	
	874220	1	Cable terminal	
		1	Seal	
	873854	1	Sealing sleeve	
	978999	1	Fuse	
9	881484	1	Cable terminal, starter motor	
	970798	1	Cable terminal, starter motor	Included in Cable Harness 881978
10	873959	1	Breaker, emerency stop	
	828586	1	Nut, emerency stop	
11	9168792	1	Housing, rpm	Included in Cable Harness 881978
	11039397	1	Rubber sleeve, rpm	
12	976256	1	Switch	
	8142100	1	Adapter	
13	8622455	1	Receptacle housing	For Camshaft RPM
	874652	1	Adapter	
14		1	Clutch	
15	1275599	1	Impulse sensor	
16	1275789	1	Bracket	
17	975880	2	Flange screw	
18	946544	1	Flange screw	
19	950562	1	Pin	
20	1212905	1	Insulator	Included in Cable Harness 881978
21	948856	1	Receptacle housing	
22	874529	1	Adapter, charge air pressure/temp	
	9456341	1	Receptacle housing, charge air pressure/temp	Included in Cable Harness 881978
23	1307035	1	Insulator, oil pressure	
		1	Cable terminal, oil pressure	
24	9452506	1	Sleeve	

D3-110I-B, D3-110I-C, D3-130A-B, D3-130I-B, D3-130A-C, D3-130I-C, D3-160A-B, D3-160I-B, D3-160A-C, D3-160I-C, D3-190A-B, D3-190I-B, D3-190A-C, D3-190I-C

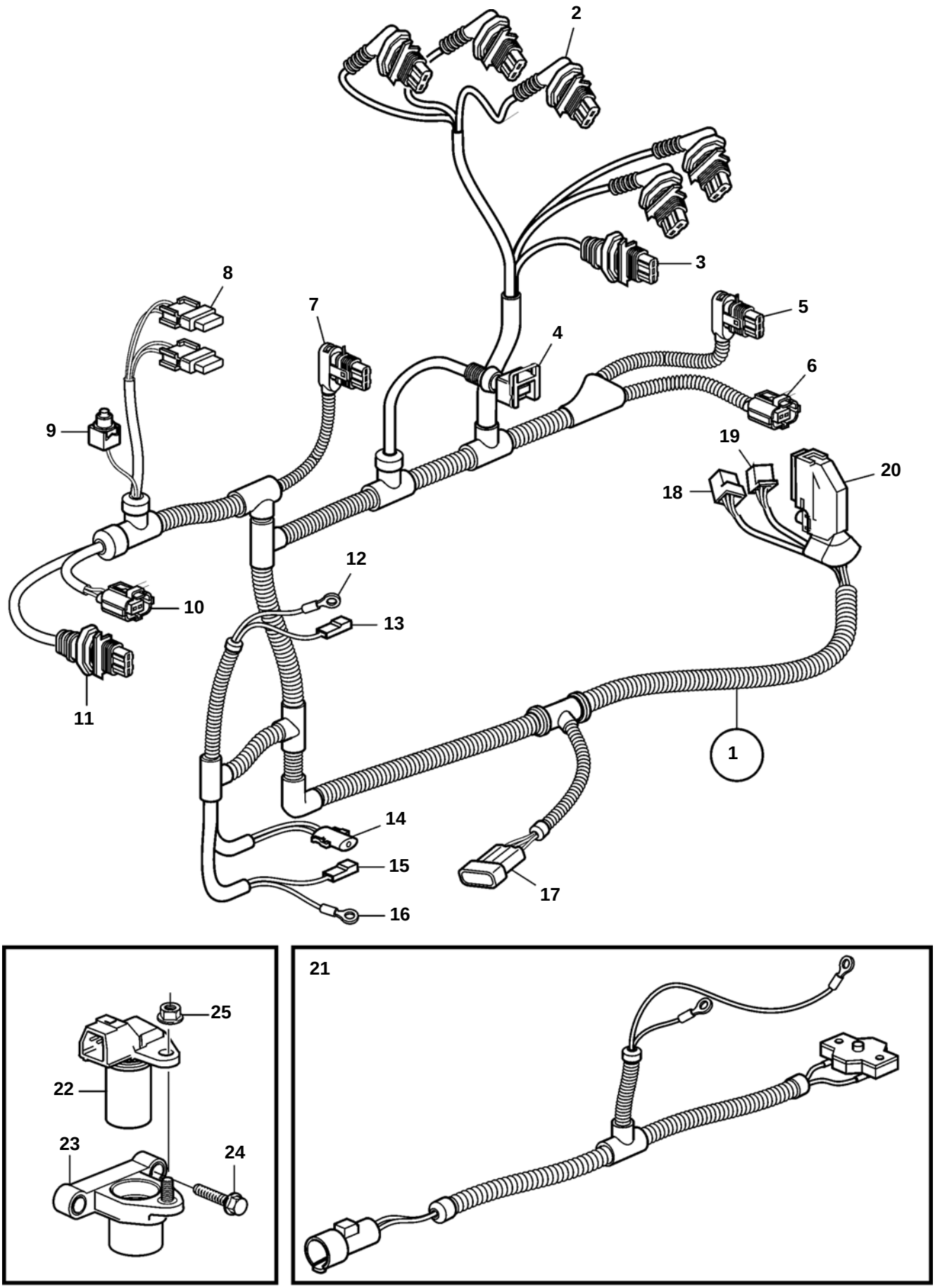

22883

D3-110I-B, D3-110I-C, D3-130A-B, D3-130I-B, D3-130A-C, D3-130I-C, D3-160A-B, D3-160I-B, D3-160A-C, D3-160I-C, D3-190A-B, D3-190I-B, D3-190A-C, D3-190I-C

REF	PART NO.	QTY	DESCRIPTION	NOTES
1	3817979	1	Cable harness	
2	8622454	1	Receptacle housing	
	8637824	2	Cable terminal	
	979908	2	Seal	
	3809871	1	Rubber cap	
3	8622455	1	Receptacle housing	
	970772	3	Seal	
4	976256	1	Switch	
	970778	2	Cable terminal	
	970772	2	Seal	
5	8622454	1	Receptacle housing	
	8637824	2	Cable terminal	
	970773	2	Seal	
	888693	1	Adapter	
6	11039397	1	Rubber sleeve	
	948702	1	Strip clamp	
7	9456341	1	Receptacle housing	
	970772	4	Seal	
	874529	1	Adapter	
8		1	Fuse holder	
	874220	1	Cable terminal	
		1	Seal	
	873854	1	Sealing sleeve	
	978999	1	Fuse	
9	973121	2	Cable terminal	
10	9469830	1	Receptacle housing	
	8637679	2	Seal	
11	8645258	1	Receptacle housing	
	970772	3	Seal	
12	970798	1	Cable terminal	
13	881484	1	Cable terminal	
	943511	1	Receptacle housing	
14	1307035	1	Insulator	
		1	Cable terminal	
15	949597	1	Housing	
	973121	1	Cable terminal	
16	970798	1	Cable terminal	
17	874211	1	Tab housing	
	874212	1	Lock	
	874213	3	Cable terminal	
	874214	3	Seal	
	948702	1	Strip clamp	
18	1212905	1	Insulator	
	970746	2	Cable terminal	
	970745	4	Cable terminal	
19	948856	1	Receptacle housing	
	881486	2	Cable terminal	
	949206	2	Cable terminal	
20	9494934	1	Cover	
	9187012	1	Clip	
	9456594	1	Cover	
	948702	1	Strip clamp	
	9456578	1	Receptacle housing	
	9442487	32	Cable terminal	
	9456580	1	Receptacle housing	
	9456574	1	Receptacle housing	
	970777	6	Cable terminal	
21	3587374	1	Wiring harness	For SX Drive.
22	30713485	1	Sender	
23	30637803	1	Bracket	
24	977814	2	Screw	
25	949278	1	Lock nut	

D3-110I-A, D3-110I-B, D3-110I-C, D3-130A-A, D3-130I-A, D3-130A-B, D3-130I-B, D3-130A-C, D3-130I-C, D3-160A-A, D3-160I-A, D3-160A-B, D3-160I-B, D3-160A-C, D3-160I-C, D3-190A-B, D3-190I-B, D3-190A-C, D3-190I-C

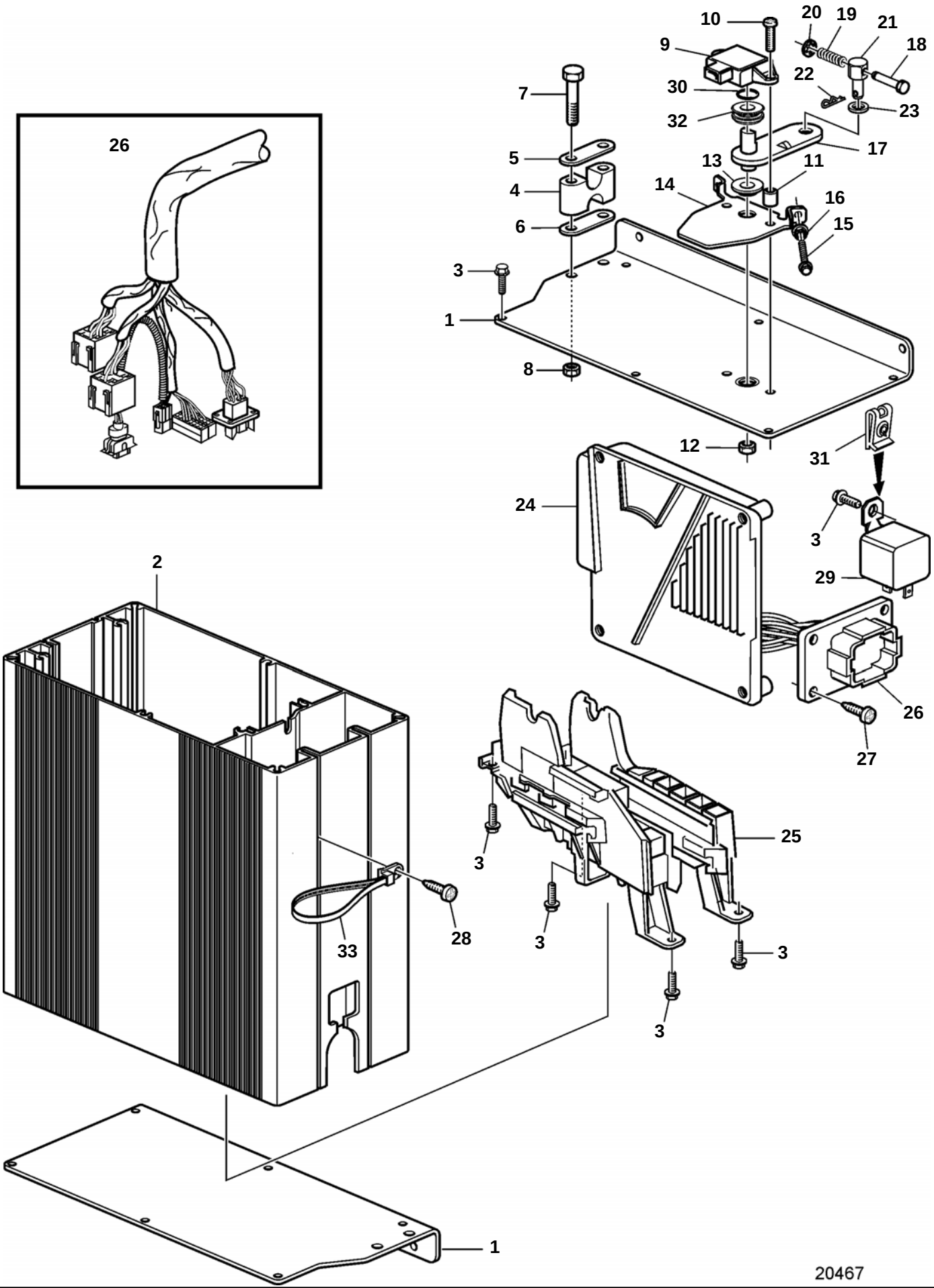

D3-110I-A, D3-110I-B, D3-110I-C, D3-130A-A, D3-130I-A, D3-130A-B, D3-130I-B, D3-130A-C, D3-130I-C, D3-160A-A, D3-160I-A, D3-160A-B, D3-160I-B, D3-160A-C, D3-160I-C, D3-190A-B, D3-190I-B, D3-190A-C, D3-190I-C

REF	PART NO.	QTY	DESCRIPTION
1	3807834	2	Cover
2	3807556	1	Housing
3	947493	17	Flange screw
4	872074	1	Retainer
5	819068	1	Washer
6	872076	1	Washer
7	969439	2	Screw
8	949874	2	Lock nut
9	1336385	1	Potentiometer
10	969558	2	Screw
11	3825525	2	Spacer
12	963103	2	Lock nut
13	3829680	1	Bushing
14	3807844	1	Bracket
15	947542	2	Screw
16	945407	2	Flange nut
17		1	Lever
18	814083	1	Adjusting nut
19	814086	1	Spring
20	968766	1	Retainer
21	814085	1	Cube
22	664822	1	Lock spring
23	955893	1	Washer
24	3586930	1	Control unit, eecu
25	3807843	1	Bracket
26	3807365	1	Cable kit
27	969456	4	6 point socket screw
28	969456	1	6 point socket screw
29	873740	2	Relay
30	943342	1	Sealing ring
31	191391	2	Spring nut
32	3829681	1	Washer
33	949666	1	Strip clamp

D3-110I-A, D3-110I-B, D3-110I-C, D3-130A-A, D3-130I-A, D3-130A-B, D3-130I-B, D3-130A-C, D3-130I-C, D3-160A-A, D3-160I-A, D3-160A-B, D3-160I-B, D3-160A-C, D3-160I-C, D3-190A-B, D3-190I-B, D3-190A-C, D3-190I-C

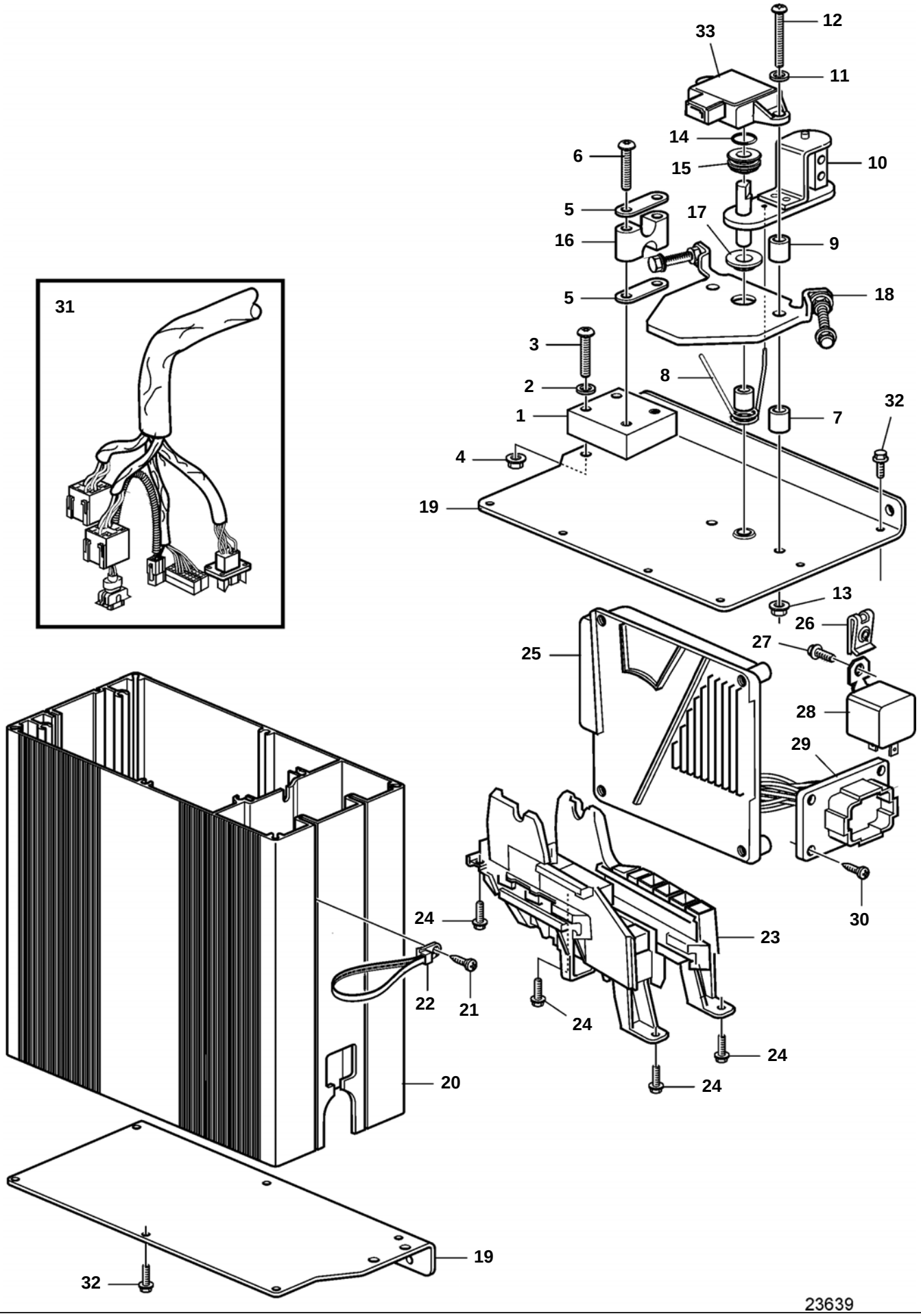

D3-110I-A, D3-110I-B, D3-110I-C, D3-130A-A, D3-130I-A, D3-130A-B, D3-130I-B, D3-130A-C, D3-130I-C, D3-160A-A, D3-160I-A, D3-160A-B, D3-160I-B, D3-160A-C, D3-160I-C, D3-190A-B, D3-190I-B, D3-190A-C, D3-190I-C

REF	PART NO.	QTY	DESCRIPTION
1	3819195	1	Bracket
2	940090	2	Washer
3	969439	2	Screw
4	949874	2	Lock nut
5	819068	2	Washer
6	969439	2	Screw
7	847150	3	Spacer sleeve
8	3883921	1	Spring
9		2	Spacer
10	3812728	1	Lever
11	940090	2	Washer
12	969440	2	Screw
13	949874	2	Lock nut
14	943342	1	Sealing ring
15	3829681	1	Washer
16	872074	1	Retainer
17	3829680	1	Bushing
18	947542	2	Screw
19	3807834	2	Cover
20	3807556	1	Housing
21	969456	1	6 point socket screw
22	949666	1	Strip clamp
23	3807843	1	Bracket
24	947493	6	Flange screw
25	3586930	1	Control unit, eecu
26	191391	2	Spring nut
27	947493	1	Flange screw
28	873740	2	Relay
29	3807365	1	Cable kit
30	969456	4	6 point socket screw
31	3807365	1	Cable kit
32	947493	11	Flange screw
33	1336385	1	Potentiometer

D3-110I-A, D3-110I-B, D3-110I-C, D3-130A-A, D3-130I-A, D3-130A-B, D3-130I-B, D3-130A-C, D3-130I-C, D3-160A-A, D3-160I-A, D3-160A-B, D3-160I-B, D3-160A-C, D3-160I-C, D3-190A-B, D3-190I-B, D3-190A-C, D3-190I-C

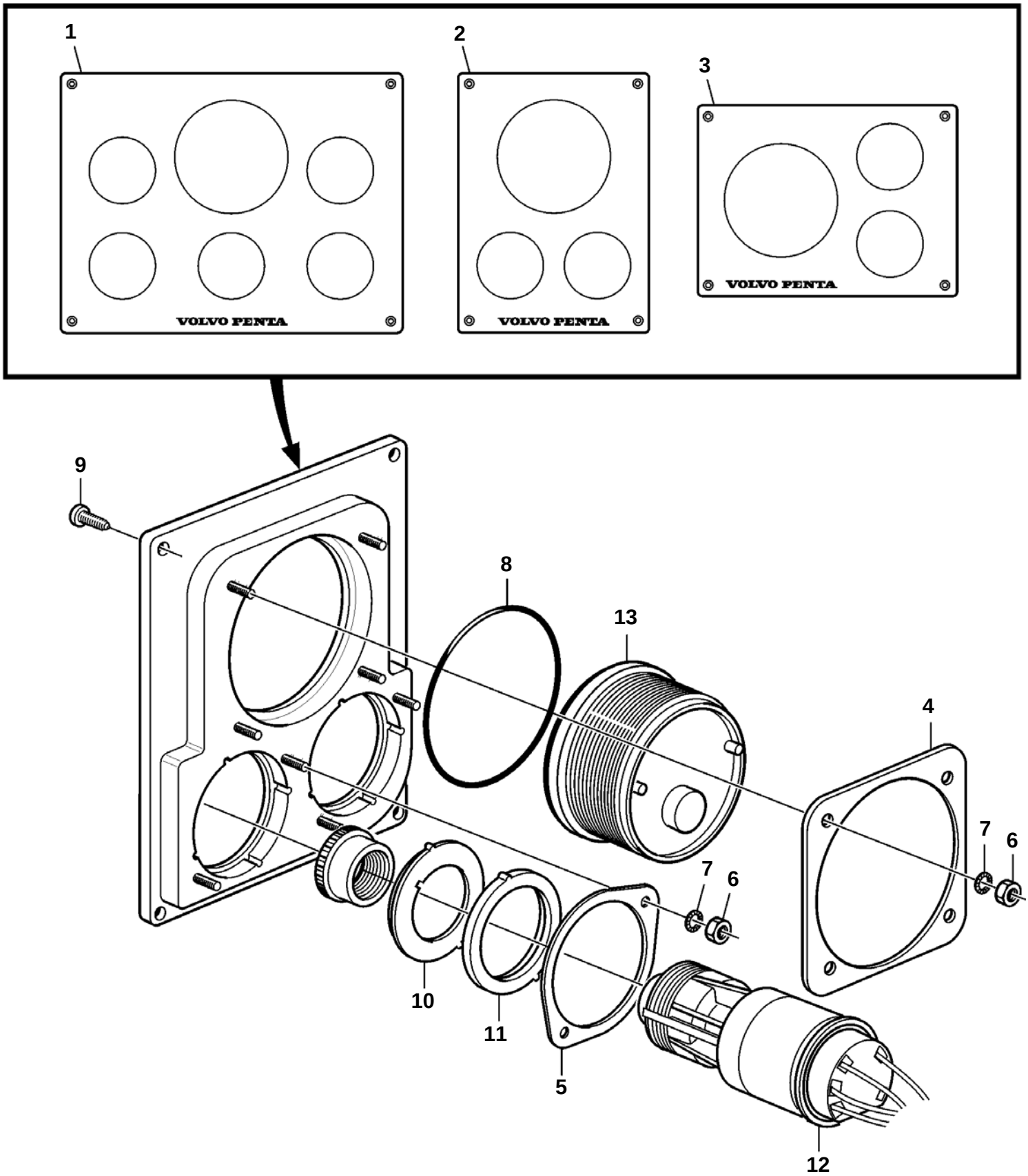

D3-110I-A, D3-110I-B, D3-110I-C, D3-130A-A, D3-130I-A, D3-130A-B, D3-130I-B, D3-130A-C, D3-130I-C, D3-160A-A, D3-160I-A, D3-160A-B, D3-160I-B, D3-160A-C, D3-160I-C, D3-190A-B, D3-190I-B, D3-190A-C, D3-190I-C

REF	PART NO.	QTY	DESCRIPTION	NOTES
1	3589928	1	Instrument panel	
2	3589929	1	Instrument panel	
3	3808659	1	Instrument panel	
4	3808692	1	Lock ring	
5	3808693	1	Lock ring	
6	984990	8	Nut	
7	984991	8	Washer	
8	874843	2	Ring	D=52mm
	874844	1	Ring	D=85mm
9	828647	4	Screw	
10	3589932	1	Sleeve	
11	3809239	1	Spacer ring	
12		X	Lock, ignition	
13		X	Instrument	

D3-110I-A, D3-110I-B, D3-130A-A, D3-130I-A, D3-130A-B, D3-130I-B, D3-160A-A, D3-160I-A, D3-160A-B, D3-160I-B, D3-190A-B, D3-190I-B

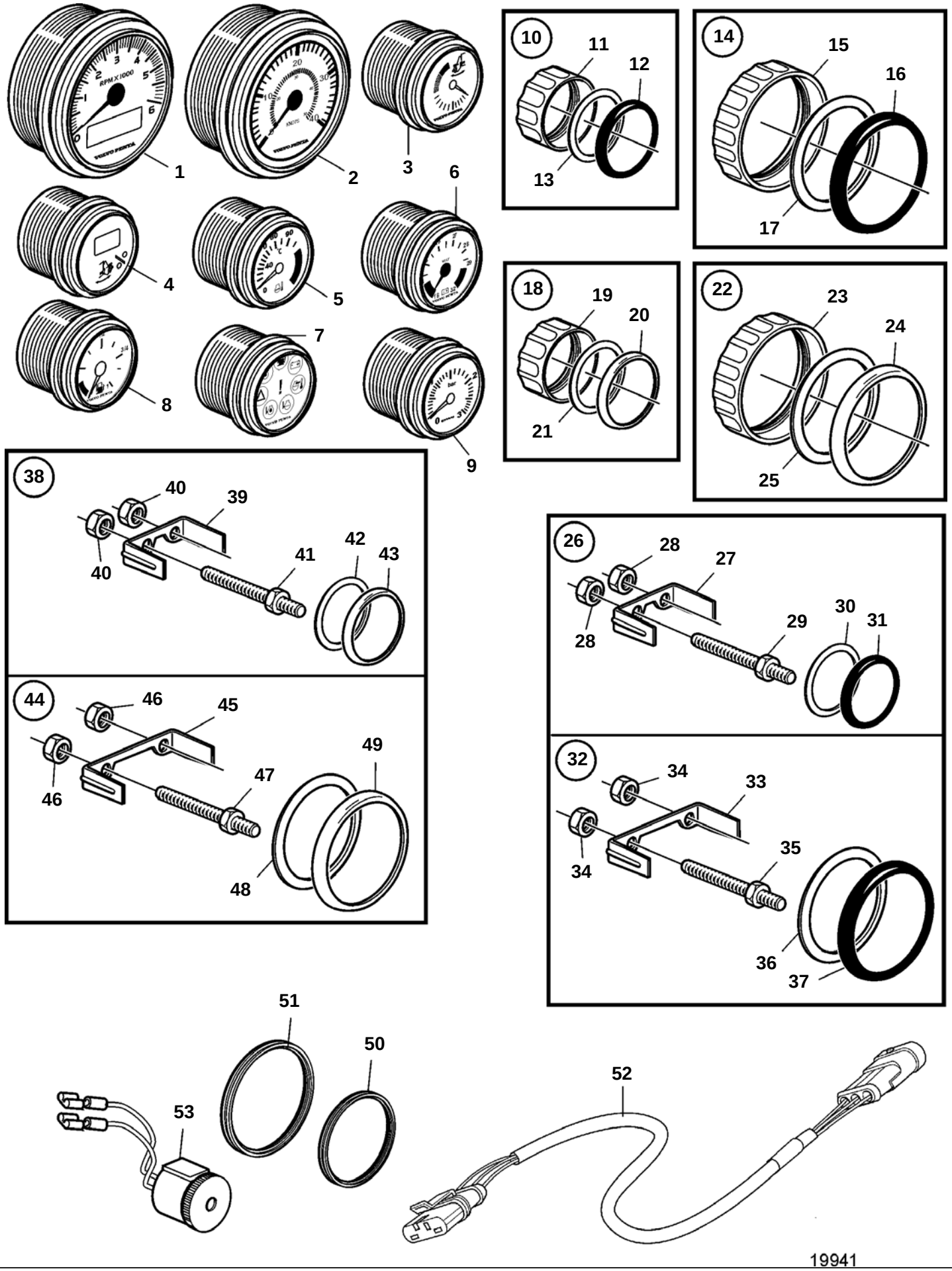

D3-110I-A, D3-110I-B, D3-130A-A, D3-130I-A, D3-130A-B, D3-130I-B, D3-160A-A, D3-160I-A, D3-160A-B, D3-160I-B, D3-190A-B, D3-190I-B

REF	PART NO.	QTY	DESCRIPTION	NOTES
1	881647	1	Tachometer	BLACK D=85mm, Engine speed/hours
	881653	1	Tachometer	Engine speed/hours, WHITE D=85mm
	3586222	1	Tachometer	BLACK D=85mm, Engine speed/hours, text messages
	3586223	1	Tachometer	WHITE D=85mm, Engine speed/hours, text messages
2	874916	1	Speedometer	BLACK 0-20 Knots
	874917	1	Speedometer	BLACK 0-40 Knots
	874929	1	Speedometer	WHITE 0-20 Knots
	874930	1	Speedometer	WHITE 0-40 Knots
3	3812881	1	Trim gauge	BLACK ANALOG
	3812911	1	Trim gauge	WHITE ANALOG
4	881648	1	Trim gauge	BLACK DIGITAL
	881654	1	Trim gauge	WHITE DIGITAL
5	874904	1	Thermometer, coolant water	BLACK 0-120°C
	874921	1	Thermometer, coolant water	WHITE 0-120°C
	874918	1	Thermometer, coolant water	BLACK 40-250 °F
	874931	1	Thermometer, coolant water	WHITE 40-250 °F
6	881649	1	Voltmeter	BLACK
	881658	1	Voltmeter	WHITE
7	874915	1	Instrument, alarm	BLACK D=52mm
	874927	1	Instrument, alarm	WHITE D=52mm
8	874914	1	Fuel gauge	BLACK D=52mm
	874926	1	Fuel gauge	WHITE D=52mm
9	874910	1	Turbo pressure gauge	BLACK 0-3 bar
	874920	1	Turbo pressure gauge	BLACK 0-45 PSI
	874924	1	Turbo pressure gauge	WHITE 0-3 bar
	874933	1	Turbo pressure gauge	WHITE 0-45 PSI
10	874709	1	Mounting kit	BLACK D=52mm
11	874450	1	· Attaching ring	
12	874448	1	· Ring	
13	874707	1	· Gasket	
14	874708	1	Mounting kit	BLACK D=85mm
15	874449	1	· Attaching ring	
16	874447	1	· Ring	
17	874706	1	· Gasket	
18	874733	1	Mounting kit	CHROME D=52mm
19	874450	1	· Attaching ring	
20	874731	1	· Ring	
21	874707	1	· Gasket	
22	874732	1	Mounting kit	CHROME D=85mm
23	874449	1	· Attaching ring	
24	874730	1	· Ring	
25	874706	1	· Gasket	
26	881611	1	Brace kit	BLACK D=52mm
27	881607	1	· Brace	
28	881610	2	· Nut	
29	881609	2	· Stud	
30	874707	1	· Gasket	
31	874448	1	· Ring	
32	881612	1	Brace kit	BLACK D=85mm
33	881608	1	· Brace	
34	881610	2	· Nut	
35	881609	2	· Stud	
36	874706	1	· Gasket	
37	874447	1	· Ring	
38	881613	1	Brace kit	CHROME D=52mm
39	881607	1	· Brace	
40	881610	2	· Nut	
41	881609	2	· Stud	
42	874707	1	· Gasket	
43	874731	1	· Ring	
44	881614	1	Brace kit	CHROME D=85mm
45	881608	1	· Brace	
46	881610	2	· Nut	
47	881609	2	· Stud	
48	874706	1	· Gasket	
49	874730	1	· Ring	
50	874843	1	Ring, sealing	For flush mounting., D=52mm

D3-110I-A, D3-110I-B, D3-130A-A, D3-130I-A, D3-130A-B, D3-130I-B, D3-160A-A, D3-160I-A, D3-160A-B, D3-160I-B, D3-190A-B, D3-190I-B

REF	PART NO.	QTY	DESCRIPTION	NOTES
51	874844	1	Ring, sealing	D=85mm, For flush mounting.
52	874759	1	Extension cable, instrument	L=1000mm
53	3817974	1	Alarm	

D3-110I-A, D3-110I-B, D3-130A-A, D3-130I-A, D3-130A-B, D3-130I-B, D3-160A-A, D3-160I-A, D3-160A-B, D3-160I-B, D3-190A-B, D3-190I-B

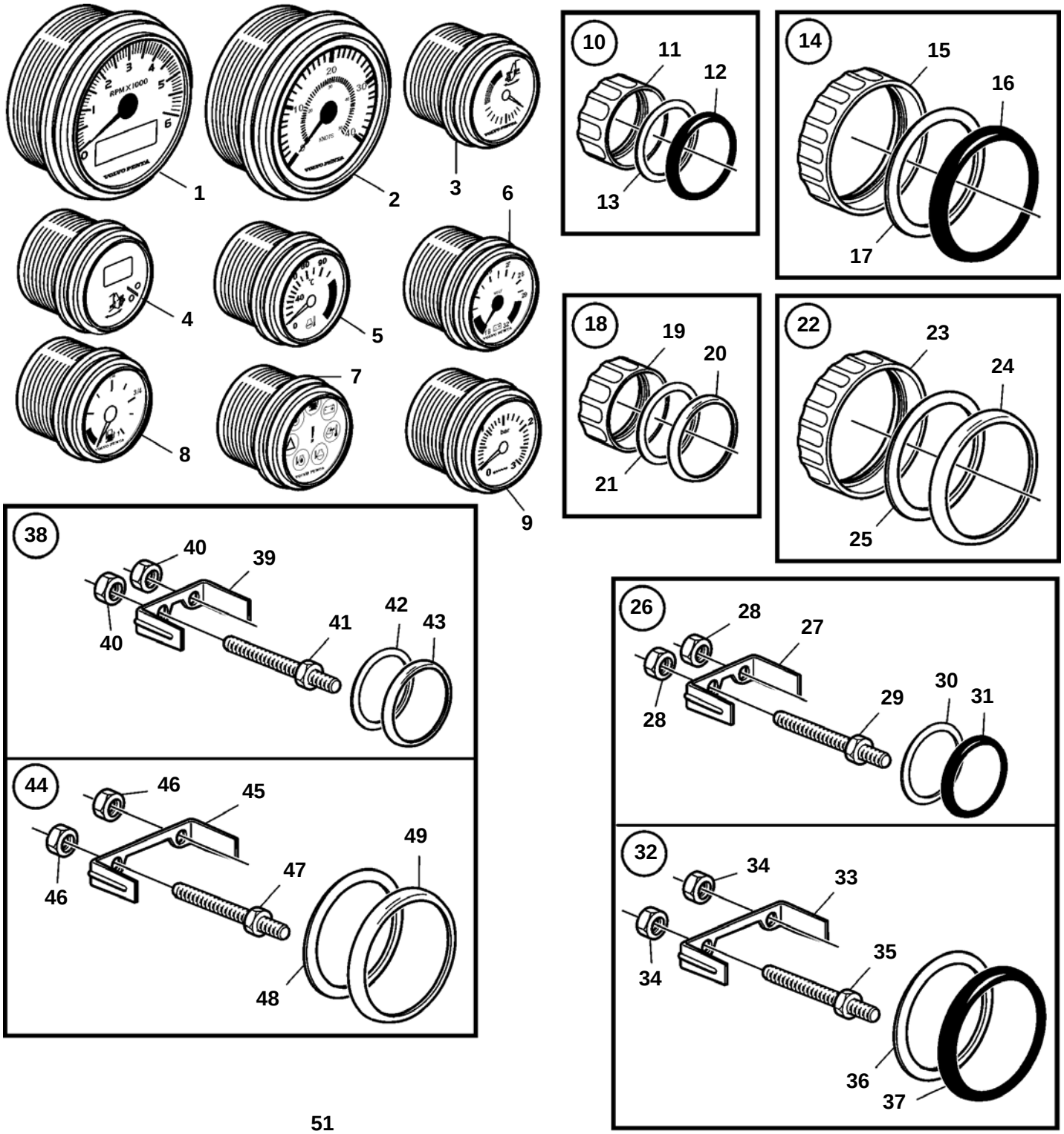

D3-110I-A, D3-110I-B, D3-130A-A, D3-130I-A, D3-130A-B, D3-130I-B, D3-160A-A, D3-160I-A, D3-160A-B, D3-160I-B, D3-190A-B, D3-190I-B

REF	PART NO.	QTY	DESCRIPTION	NOTES
1	881647	1	Tachometer	BLACK D=85mm, Engine speed/hours
	881653	1	Tachometer	Engine speed/hours, WHITE D=85mm
	3586222	1	Tachometer	Engine speed/hours, text messages, BLACK D=85mm
	3586223	1	Tachometer	WHITE D=85mm, Engine speed/hours, text messages
2	874916	1	Speedometer	BLACK 0-20 Knots
	874917	1	Speedometer	BLACK 0-40 Knots
	874929	1	Speedometer	WHITE 0-20 Knots
	874930	1	Speedometer	WHITE 0-40 Knots
3	3812881	1	Trim gauge	BLACK ANALOG
	3812911	1	Trim gauge	WHITE ANALOG
4	881648	1	Trim gauge	BLACK DIGITAL
	881654	1	Trim gauge	WHITE DIGITAL
5	874904	1	Thermometer, coolant water	BLACK 0-120°C
	874921	1	Thermometer, coolant water	WHITE 0-120°C
	874918	1	Thermometer, coolant water	BLACK 40-250 °F
	874931	1	Thermometer, coolant water	WHITE 40-250 °F
6	881649	1	Voltmeter	BLACK
	881658	1	Voltmeter	WHITE
7	874915	1	Instrument, alarm	BLACK D=52mm
	874927	1	Instrument, alarm	WHITE D=52mm
8	874914	1	Fuel gauge	BLACK D=52mm
	874926	1	Fuel gauge	WHITE D=52mm
9	874910	1	Turbo pressure gauge	BLACK 0-3 bar
	874920	1	Turbo pressure gauge	BLACK 0-45 PSI
	874924	1	Turbo pressure gauge	WHITE 0-3 bar
	874933	1	Turbo pressure gauge	WHITE 0-45 PSI
10	874709	1	Mounting kit	BLACK D=52mm
11	874450	1	· Attaching ring	
12	874448	1	· Ring	
13	874707	1	· Gasket	
14	874708	1	Mounting kit	BLACK D=85mm
15	874449	1	· Attaching ring	
16	874447	1	· Ring	
17	874706	1	· Gasket	
18	874733	1	Mounting kit	CHROME D=52mm
19	874450	1	· Attaching ring	
20	874731	1	· Ring	
21	874707	1	· Gasket	
22	874732	1	Mounting kit	CHROME D=85mm
23	874449	1	· Attaching ring	
24	874730	1	· Ring	
25	874706	1	· Gasket	
26	881611	1	Brace kit	BLACK D=52mm
27	881607	1	· Brace	
28	881610	2	· Nut	
29	881609	2	· Stud	
30	874707	1	· Gasket	
31	874448	1	· Ring	
32	881612	1	Brace kit	BLACK D=85mm
33	881608	1	· Brace	
34	881610	2	· Nut	
35	881609	2	· Stud	
36	874706	1	· Gasket	
37	874447	1	· Ring	
38	881613	1	Brace kit	CHROME D=52mm
39	881607	1	· Brace	
40	881610	2	· Nut	
41	881609	2	· Stud	
42	874707	1	· Gasket	
43	874731	1	· Ring	
44	881614	1	Brace kit	CHROME D=85mm
45	881608	1	· Brace	
46	881610	2	· Nut	
47	881609	2	· Stud	
48	874706	1	· Gasket	
49	874730	1	· Ring	
50	874843	1	Ring, sealing	For flush mounting., D=52mm

D3-110I-A, D3-110I-B, D3-130A-A, D3-130I-A, D3-130A-B, D3-130I-B, D3-160A-A, D3-160I-A, D3-160A-B, D3-160I-B, D3-190A-B, D3-190I-B

REF	PART NO.	QTY	DESCRIPTION	NOTES
51	874844	1	Ring, sealing	For flush mounting., D=85mm
52	874759	1	Extension cable, instrument	L=1000mm
53	3817974	1	Alarm	

D3-110I-C, D3-130A-C, D3-130I-C, D3-160A-C, D3-160I-C, D3-190A-C, D3-190I-C

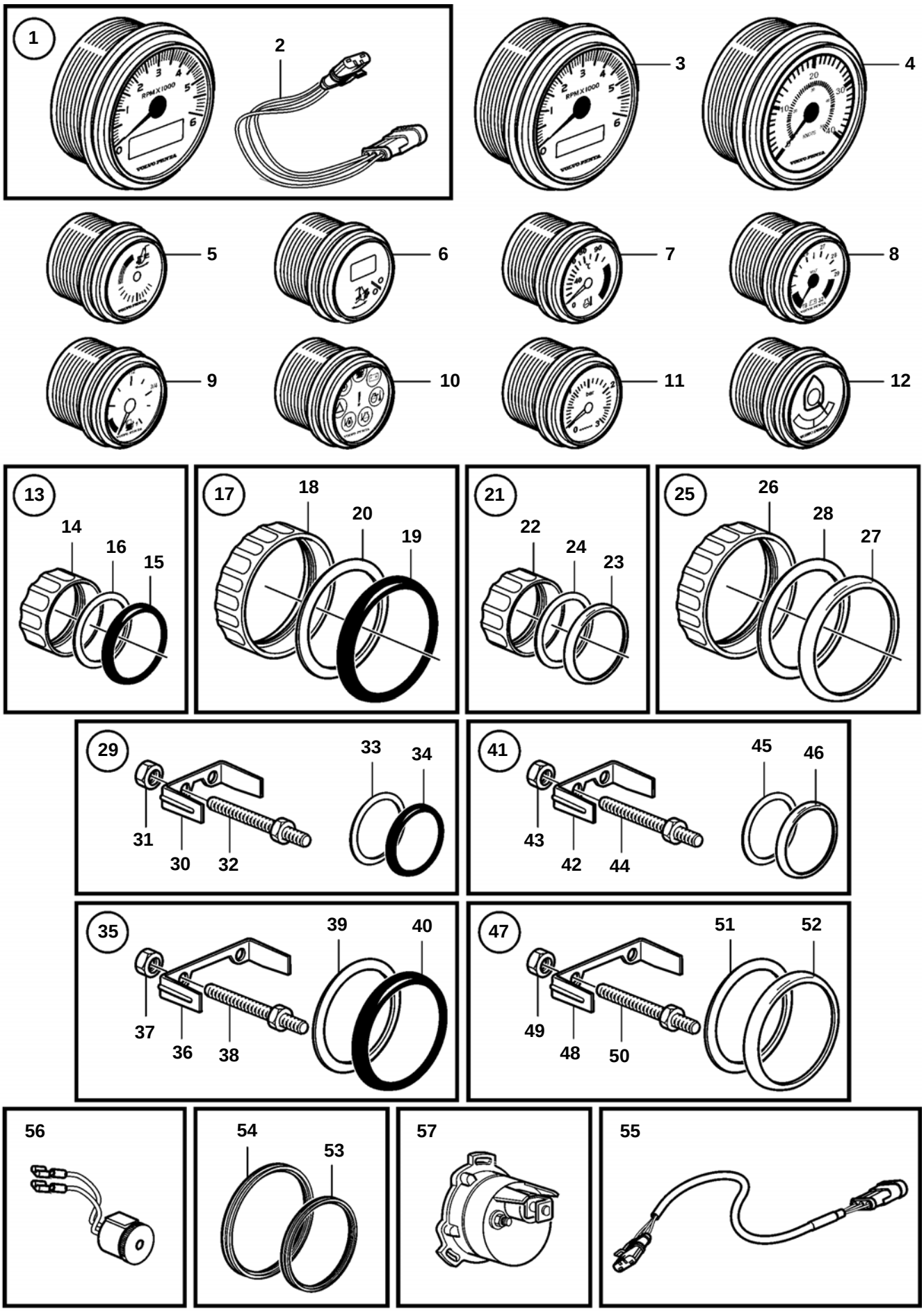

23647

D3-110I-C, D3-130A-C, D3-130I-C, D3-160A-C, D3-160I-C, D3-190A-C, D3-190I-C

REF	PART NO.	QTY	DESCRIPTION	NOTES
1	3885696	1	Tachometer	BLACK D=85mm, Only for main helm station
	3885697	1	Tachometer	Only for main helm station, WHITE D=85mm
2	3884843	1	· Cable harness	
3	881647	1	Tachometer	Only for secondary helm station, Engine speed/hours, BLACK D=85mm
	881653	1	Tachometer	WHITE D=85mm, Engine speed/hours, Only for secondary helm station
	3586222	1	Tachometer	Engine speed/hours, text messages, Only for secondary helm station, BLACK D=85mm
	3586223	1	Tachometer	Only for secondary helm station, Engine speed/hours, text messages, WHITE D=85mm
4	874916	1	Speedometer	BLACK 0-20 Knots
	874917	1	Speedometer	BLACK 0-40 Knots
	881645	1	Speedometer	BLACK 0-60 Knots
	874929	1	Speedometer	WHITE 0-20 Knots
	874930	1	Speedometer	WHITE 0-40 Knots
	881650		Speedometer	WHITE 0-60 Knots
5	3812881	1	Trim gauge	BLACK ANALOG
	3812911	1	Trim gauge	WHITE ANALOG
6	881648	1	Trim gauge	BLACK DIGITAL
	881654	1	Trim gauge	WHITE DIGITAL
7	874904	1	Thermometer, coolant water	BLACK 0-120°C
	874921	1	Thermometer, coolant water	WHITE 0-120°C
	874918	1	Thermometer, coolant water	BLACK 40-250 °F
	874931	1	Thermometer, coolant water	WHITE 40-250 °F
8	881649	1	Voltmeter	BLACK
	881658	1	Voltmeter	WHITE
9	874914	1	Fuel gauge	BLACK D=52mm
	874926	1	Fuel gauge	WHITE D=52mm
10	874915	1	Instrument, alarm	BLACK D=52mm
	874927	1	Instrument, alarm	WHITE D=52mm
11	874910	1	Turbo pressure gauge	BLACK 0-3 bar
	874920	1	Turbo pressure gauge	BLACK 0-45 PSI
	874924	1	Turbo pressure gauge	WHITE 0-3 bar
	874933	1	Turbo pressure gauge	WHITE 0-45 PSI
12	3812914	1	Rudder indicator	BLACK
	3812917		Rudder indicator	WHITE
13	874709	1	Mounting kit	BLACK D=52mm
14	874450	1	· Attaching ring	
15	874448	1	· Ring	
16	874707	1	· Gasket	
17	874708	1	Mounting kit	BLACK D=85mm
18	874449	1	· Attaching ring	
19	874447	1	· Ring	
20	874706	1	· Gasket	
21	874733	1	Mounting kit	CHROME D=52mm
22	874450	1	· Attaching ring	
23	874731	1	· Ring	
24	874707	1	· Gasket	
25	874732	1	Mounting kit	CHROME D=85mm
26	874449	1	· Attaching ring	
27	874730	1	· Ring	
28	874706	1	· Gasket	
29	881611	1	Brace kit	BLACK D=52mm
30	881607	1	· Brace	
31	881610	2	· Nut	
32	881609	2	· Stud	
33	874707	1	· Gasket	
34	874448	1	· Ring	
35	881612	1	Brace kit	BLACK D=85mm
36	881608	1	· Brace	
37	881610	2	· Nut	
38	881609	2	· Stud	
39	874706	1	· Gasket	
40	874447	1	· Ring	
41	881613	1	Brace kit	CHROME D=52mm
42	881607	1	· Brace	
43	881610	2	· Nut	
44	881609	2	· Stud	
45	874707	1	· Gasket	

D3-110I-C, D3-130A-C, D3-130I-C, D3-160A-C, D3-160I-C, D3-190A-C, D3-190I-C

REF	PART NO.	QTY	DESCRIPTION	NOTES
46	874731	1	· Ring	
47	881614	1	Brace kit	CHROME D=85mm
48	881608	1	· Brace	
49	881610	2	· Nut	
50	881609	2	· Stud	
51	874706	1	· Gasket	
52	874730	1	· Ring	
53	874843	1	Ring, sealing	D=52mm, For flush mounting.
54	874844	1	Ring, sealing	For flush mounting., D=85mm
55	874759	1	Extension cable, instrument	L=1000mm
56	3817974	1	Alarm	
57	3809099	1	Sender	Rudder indicator

D3-110I-A, D3-130A-A, D3-130I-A, D3-160A-A, D3-160I-A

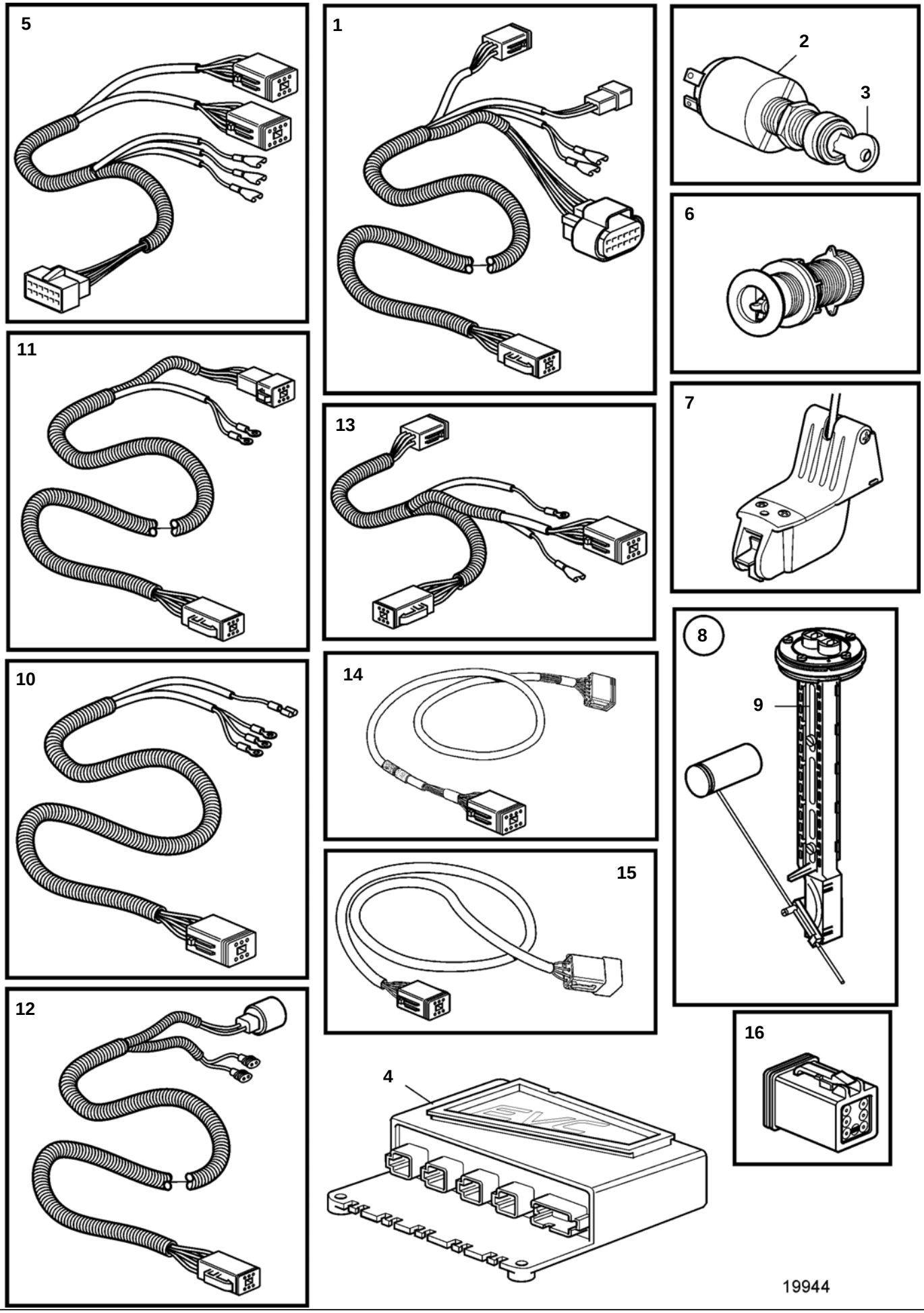

D3-110I-A, D3-130A-A, D3-130I-A, D3-160A-A, D3-160I-A

REF	PART NO.	QTY	DESCRIPTION	SEE SEC.	NOTES
1	881801	1	Cable harness		L=2,0m, Included in EVC cabel kit 3587052.
2	856659	1	Starter switch		
			· Bulletin 42-35	42-35-EN	Ignition Switch (P/N 856659-8)
3		1	· Key		State key code when ordering.
4	3807345	1	Control unit, hiu		For SX Drive., HIU
	3807347	1	Control unit, hiu		HIU, For reverse gear
5	881800	1	Cable harness		ECU to Engine, Included in EVC cabel kit 3587052.
6	3587054	1	Sender		
7	3587055	1	Sender		
8	874840	1	Sender		
9	873772	1	· Tank sensor		
10	881803	1	Cable harness		Included in EVC cabel kit 3587052., L=0,5m, For Trim instrument and Instrument light
11	881802	1	Cable		L=5,0m, For fuel level sender
12	881804	1	Cable harness		Included in EVC cabel kit 3587052., For trim pump and trim sender, L=5,0m
13	881805	1	Cable		L=0,5m
14	888248	1	Cable		L=3,0m
	888249	1	Cable		L=5,0m
	888250	1	Cable		L=7,0m
	888251	1	Cable		L=9,0m
	888253	1	Cable		L=11,0m
15	3842733	1	Extension cable'verl		(888243), L=3,0m
	888244	1	Cable		L=5,0m
	3842735	1	Extension cable'verl		L=7,0m, (888245)
	3842736	1	Extension cable'verl		L=9,0m, (888246)
	3842737	1	Extension cable'verl		(888247), L=11,0m
16	3840433	1	Plug		Plug for connection in HIU when reverse gear is used.

D3-110I-B, D3-130A-B, D3-130I-B, D3-160A-B, D3-160I-B, D3-190A-B, D3-190I-B

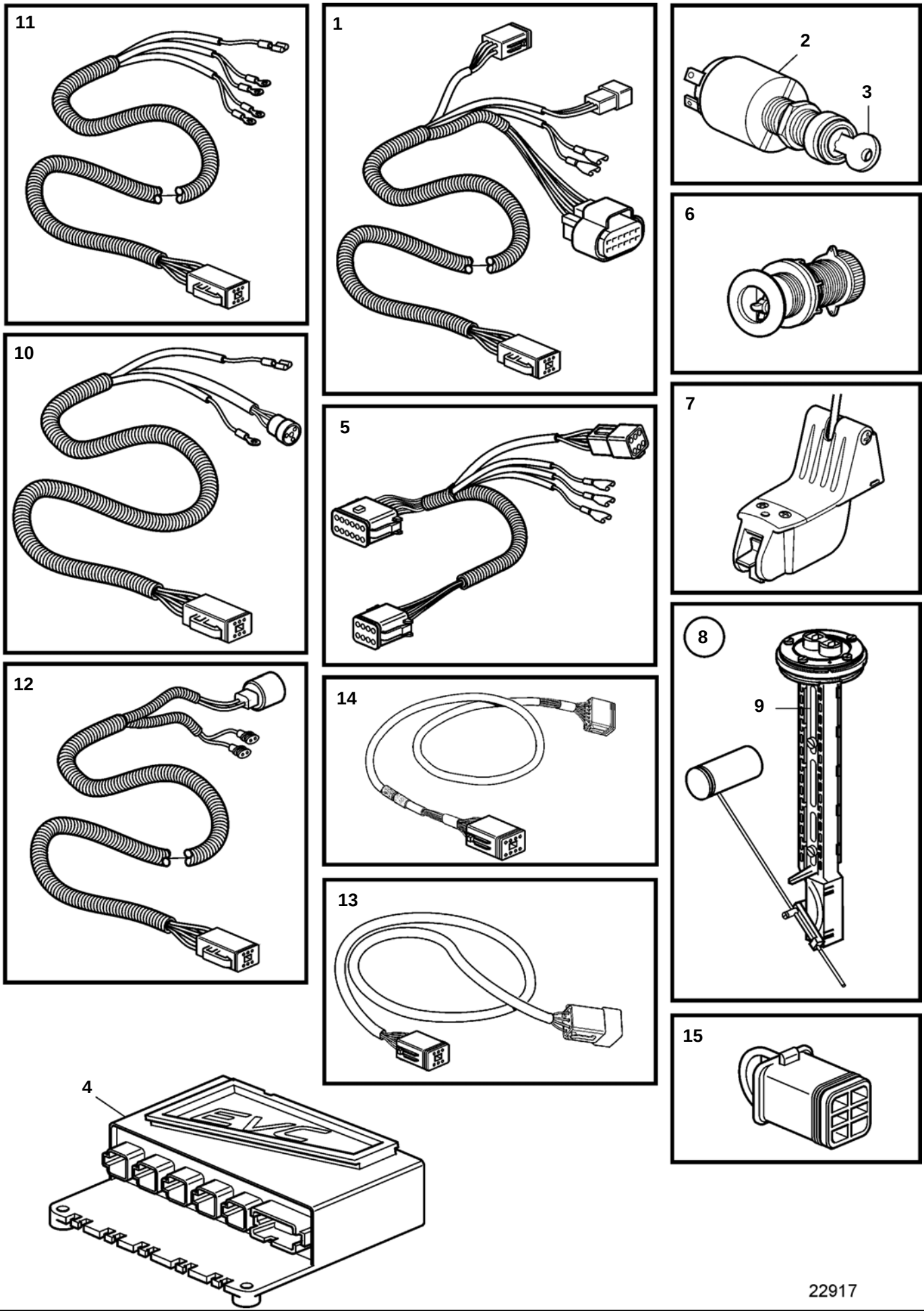

D3-110I-B, D3-130A-B, D3-130I-B, D3-160A-B, D3-160I-B, D3-190A-B, D3-190I-B

REF	PART NO.	QTY	DESCRIPTION	SEE SEC.	NOTES
1	881801	1	Cable harness		Included in EVC cabel kit 3587052., L=2,0m
2	856659	1	Starter switch		
			· Bulletin 42-35	42-35-EN	Ignition Switch (P/N 856659-8)
3		1	· Key		State key code when ordering.
4	3843408	1	Control unit, hiu		HIU for reverse gear
	3843409	1	Control unit, hiu		HIU for SX drive
5	3807226	1	Cable harness		ECU to Engine
6	3587054	1	Sender		
7	3587055	1	Sender		
8	874840	1	Sender		
9	873772	1	· Tank sensor		
10	3807228	1	Cable harness		For Trim instrument and Instrument light, L=0,5m
11	3807229	1	Cable harness		For fuel level sender, L=5,0m
12	881804	1	Cable harness		L=5,0m, For trim pump and trim sender, Included in EVC cabel kit 3587052.
13	3842733	1	Extension cable'verl		L=3,0m
	3842734	1	Extension cable'verl		L=5,0m
	3842735	1	Extension cable'verl		L=7,0m
	3842736	1	Extension cable'verl		L=9,0m
	3842737	1	Extension cable'verl		L=11,0m
14	888248	1	Cable		L=10.0' (3.0m)
	888249	1	Cable		L=5,0m
	888250	1	Cable		L=23.0' (7.0m)
	888251	1	Cable		L=9,0m
	888253	1	Cable		L=11,00m
15	3840433	1	Plug		Plug for connection in HIU when reverse gear is used.

D3-110I-C, D3-130A-C, D3-130I-C, D3-160A-C, D3-160I-C, D3-190A-C, D3-190I-C

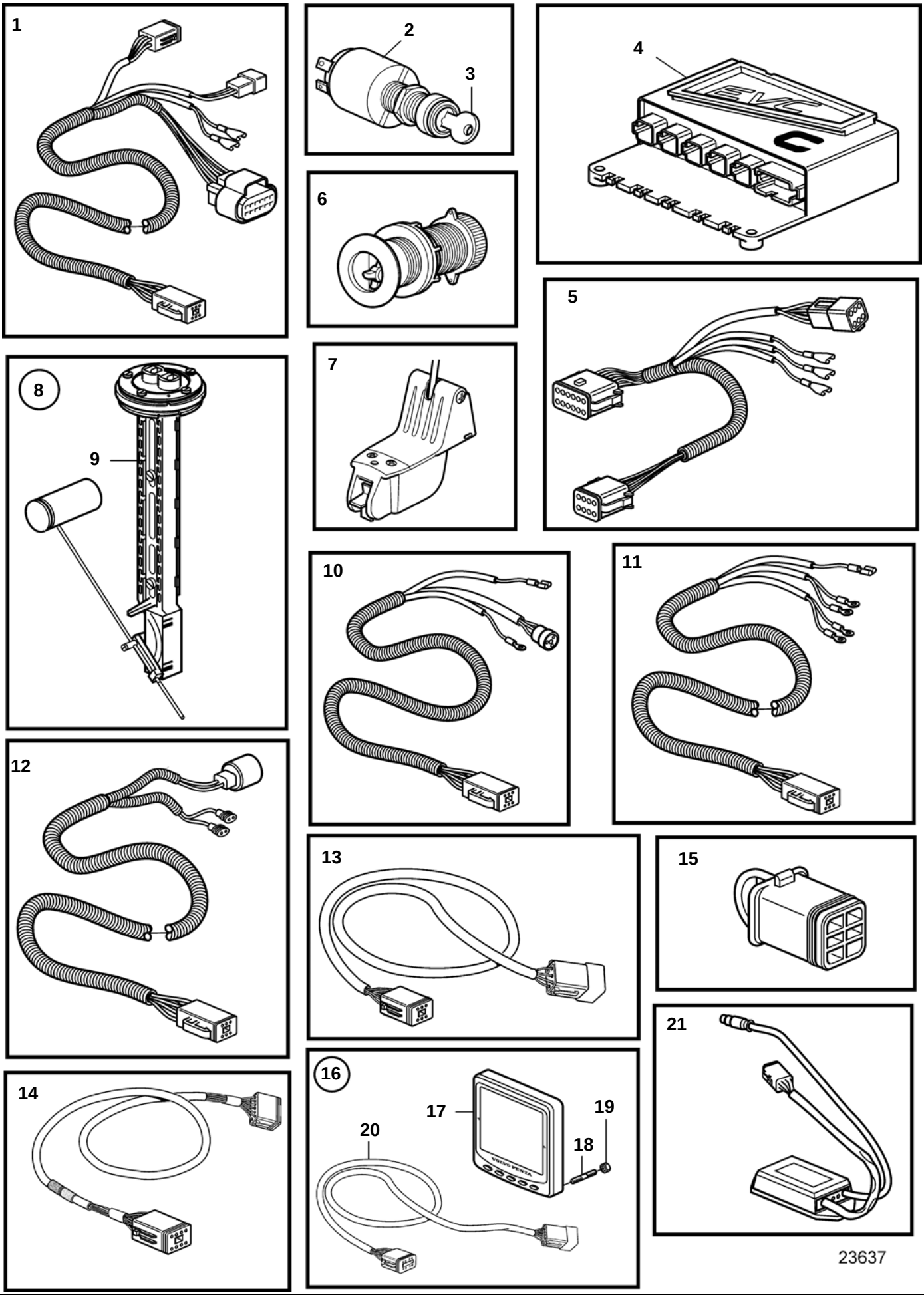

D3-110I-C, D3-130A-C, D3-130I-C, D3-160A-C, D3-160I-C, D3-190A-C, D3-190I-C

REF	PART NO.	QTY	DESCRIPTION	SEE SEC.	NOTES
1	881801	1	Cable harness		Included in EVC cabel kit 3587052., L=2,0m
2	856659	1	Starter switch		
			· Bulletin 42-35	42-35-EN	Ignition Switch (P/N 856659-8)
3		1	· Key		State key code when ordering.
4	3887304	1	Control unit, hiu		
5	3807226	1	Cable harness		ECU to Engine
6	3587054	1	Sender		
7	3587055	1	Sender		
8	874840	1	Sender		
9	873772	1	· Tank sensor		
10	3807228	1	Cable harness		For Trim instrument and Instrument light, L=0,5m
11	3807229	1	Cable harness		For fuel level sender, L=5,0m
12	881804	1	Cable harness		For trim pump and trim sender, Included in EVC cabel kit 3587052., L=5,0m
13	3842733	1	Extension cable'verl		L=3,0m
	3842734	1	Extension cable'verl		L=5,0m
	3842735	1	Extension cable'verl		L=7,0m
	3842736	1	Extension cable'verl		L=9,0m
	3842737	1	Extension cable'verl		L=11,0m
14	888248	1	Cable		L=10.0' (3.0m)
	888249	1	Cable		L=5,0m
	888250	1	Cable		L=23.0' (7.0m)
	888251	1	Cable		L=9,0m
	888253	1	Cable		L=11,00m
15	3840433	1	Plug		Plug for connection in HIU when reverse gear is used.
16	3884818	1	Display, kit		
17		1	· Display		
18	830928	4	· Stud		
19	830930	4	· Nut		
20	3588207	1	· Cable kit		
21	3848966	1	Control unit		

D3-110I-A, D3-130A-A, D3-130I-A, D3-160A-A, D3-160I-A

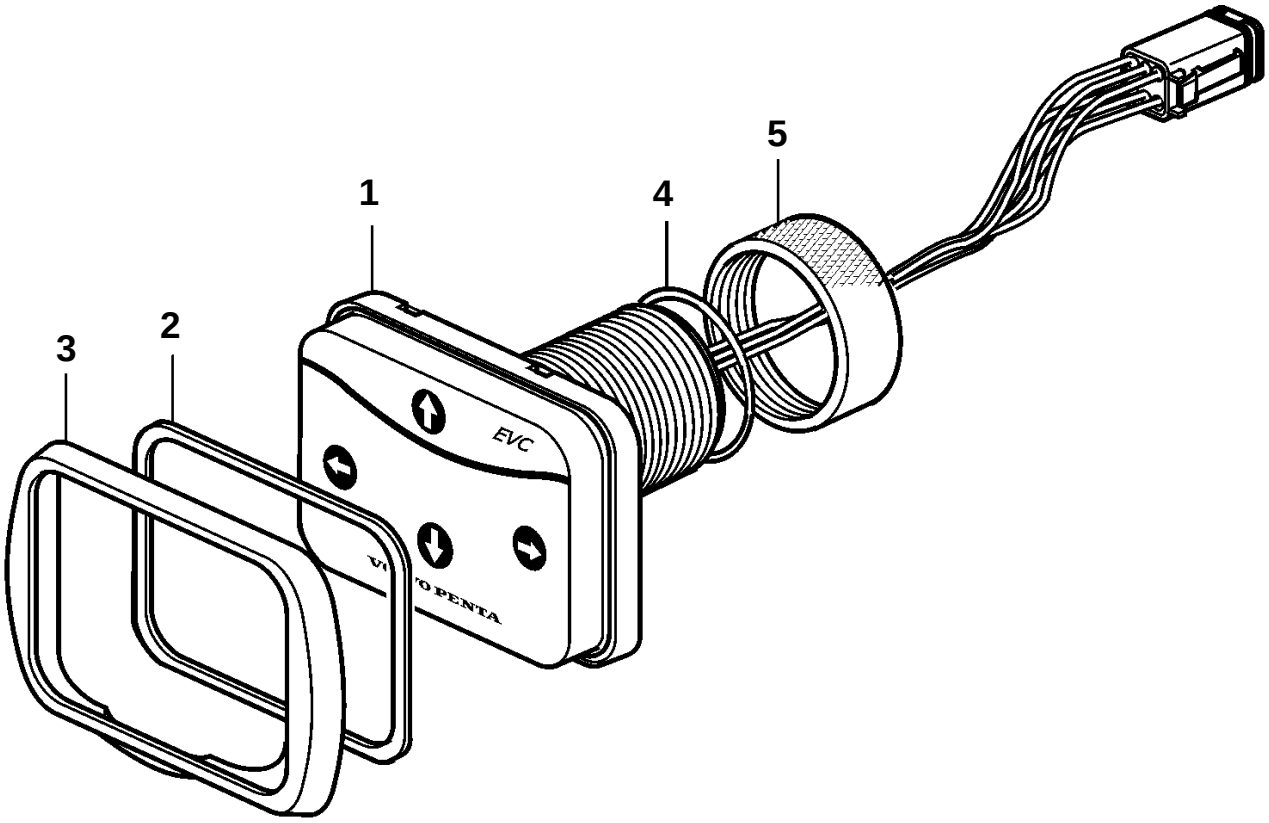

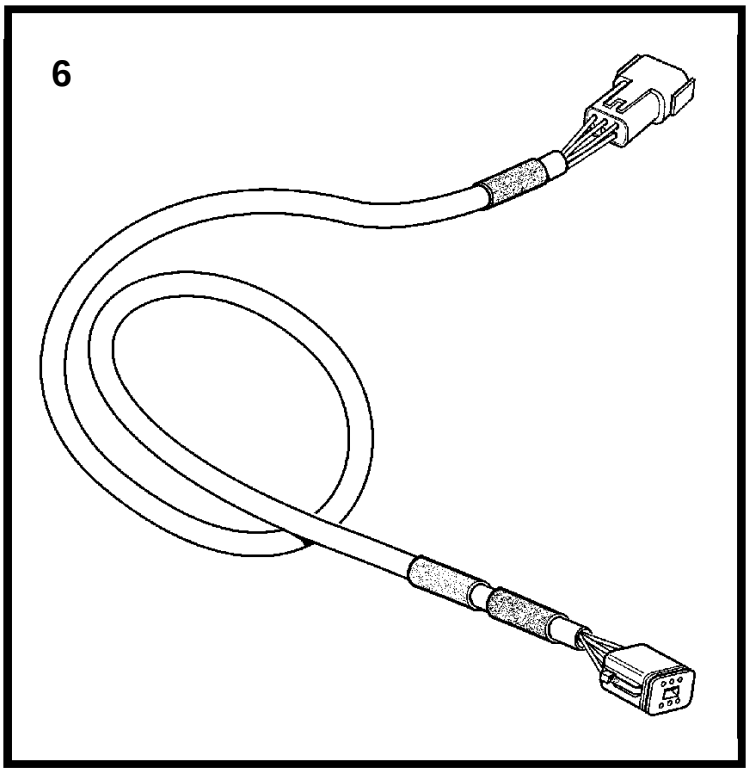

22919

D3-110I-A, D3-130A-A, D3-130I-A, D3-160A-A, D3-160I-A

REF	PART NO.	QTY	DESCRIPTION	NOTES
1	3586943	1	Control panel	
2	874192	1	Gasket	
3	874149	1	Frame	
4	874191	1	O-ring	
5	874193	1	Round nut	
6	3842733	1	Extension cable'verl	(888243), L=3,0m
	888244	1	Cable	L=5,0m
	3842735	1	Extension cable'verl	L=7,0m, (888245)
	3842736	1	Extension cable'verl	L=9,0m, (888246)
	3842737	1	Extension cable'verl	L=11,0m, (888247)

Monitoring Panel, EVC-B

D3-110I-B, D3-130A-B, D3-130I-B, D3-160A-B, D3-160I-B, D3-190A-B, D3-190I-B

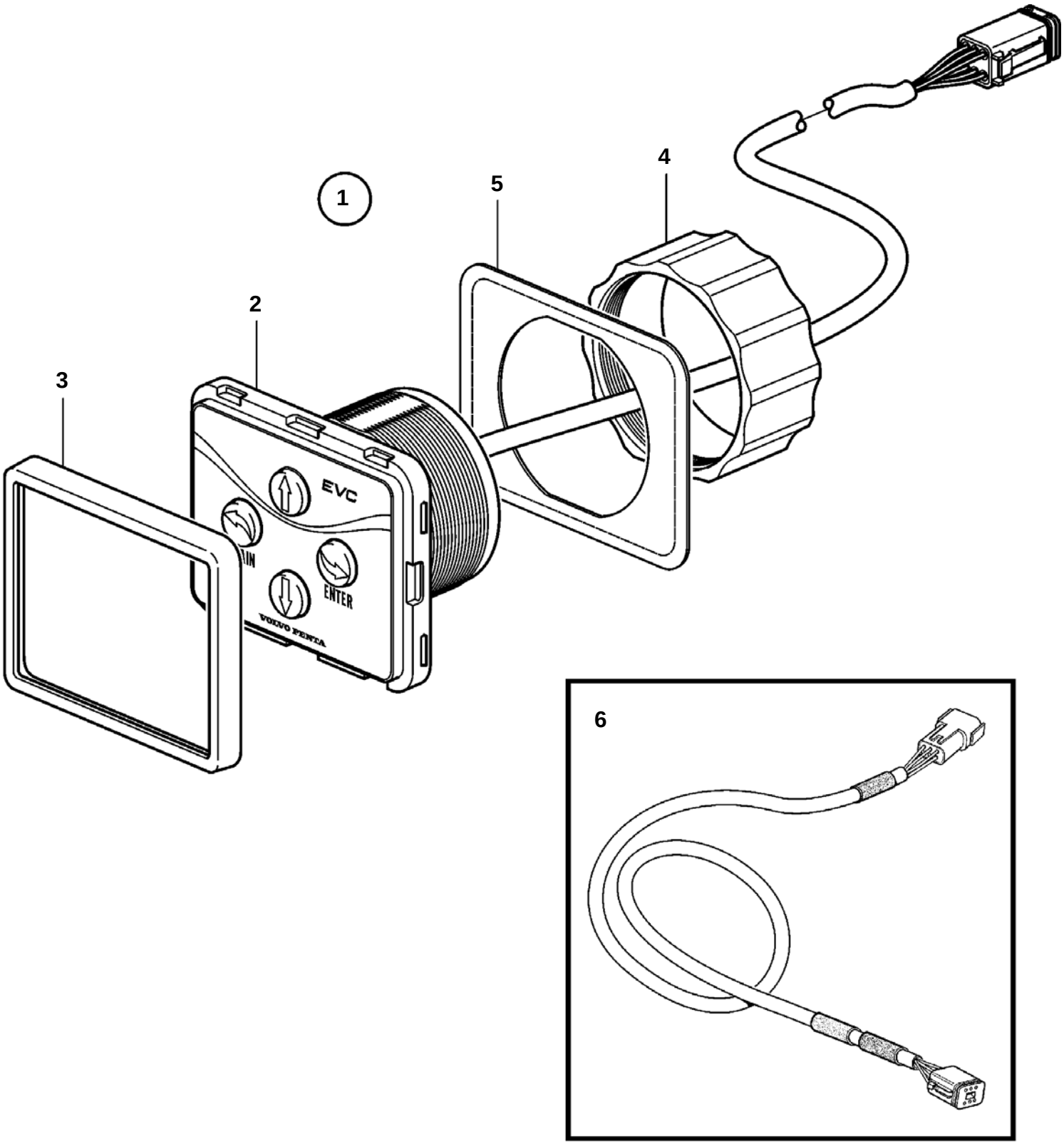

22918

D3-110I-B, D3-130A-B, D3-130I-B, D3-160A-B, D3-160I-B, D3-190A-B, D3-190I-B

REF	PART NO.	QTY	DESCRIPTION	NOTES
1	3807317	1	Control panel	
2		1	· Control panel	
3	3808131	1	· Frame	
4	3808134	1	· Nut	
5	3808135	1	· Gasket	
6	3842733	1	Extension cable'verl	L=3,0m
	3842734	1	Extension cable'verl	L=5,0m
	3842735	1	Extension cable'verl	L=7,0m
	3842736	1	Extension cable'verl	L=9,0m
	3842737	1	Extension cable'verl	L=11,0m

D3-110I-C, D3-130A-C, D3-130I-C, D3-160A-C, D3-160I-C, D3-190A-C, D3-190I-C

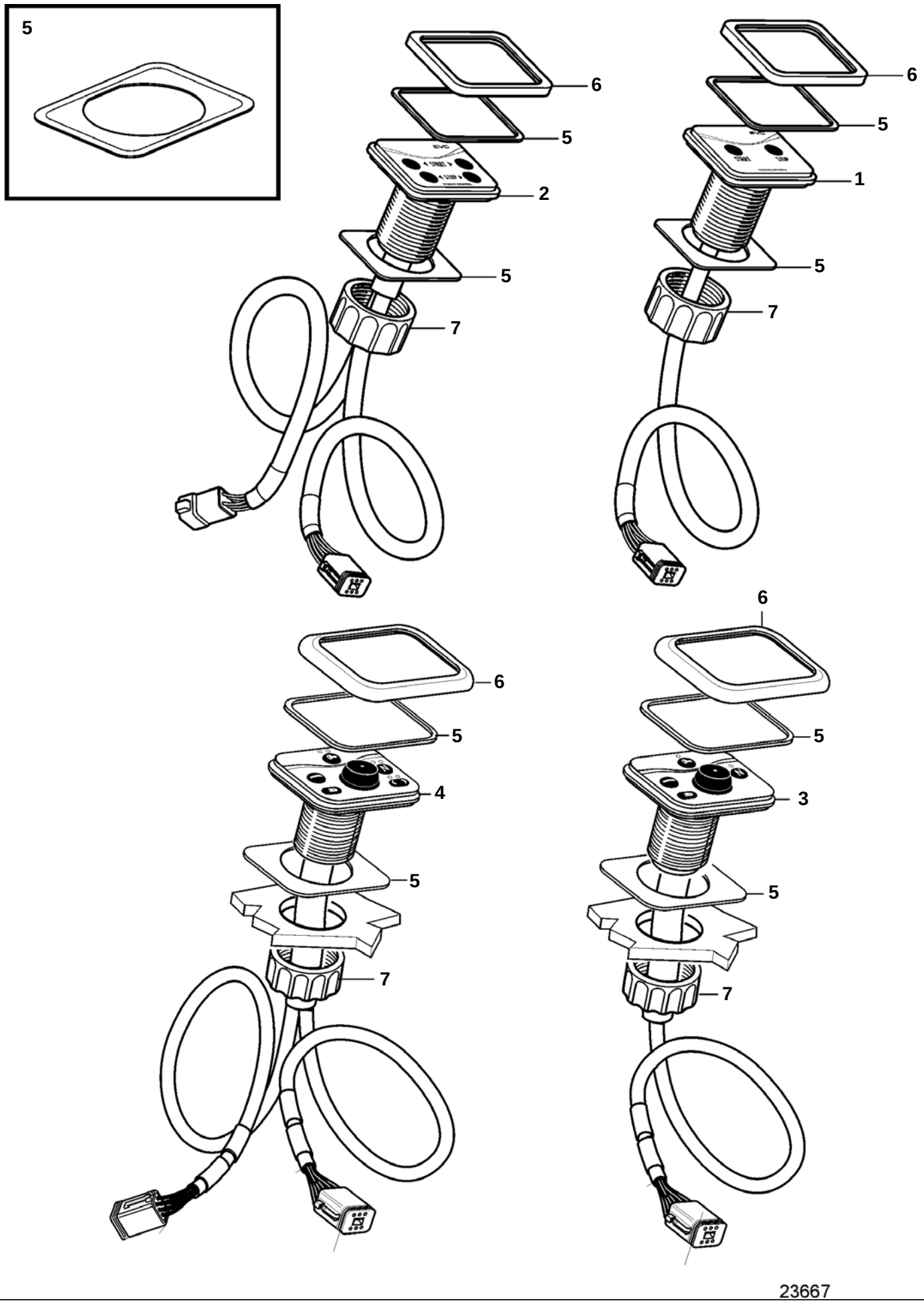

D3-110I-C, D3-130A-C, D3-130I-C, D3-160A-C, D3-160I-C, D3-190A-C, D3-190I-C

REF	PART NO.	QTY	DESCRIPTION	NOTES
1	3807315	1	Control panel	Single installation.
2	3807316	1	Control panel	Twin installation.
3	3883352	1	Control panel	Single installation.
4	3883353	1	Control panel	Twin installation.
5	3808135	1	· Gasket	Also for flushmounting.
6	3808131	1	· Frame	
7	3808134	1	· Nut	

D3-110I-A, D3-110I-B, D3-110I-C, D3-130A-A, D3-130I-A, D3-130A-B, D3-130I-B, D3-130A-C, D3-130I-C, D3-160A-A, D3-160I-A, D3-160A-B, D3-160I-B, D3-160A-C, D3-160I-C, D3-190A-B, D3-190I-B, D3-190A-C, D3-190I-C

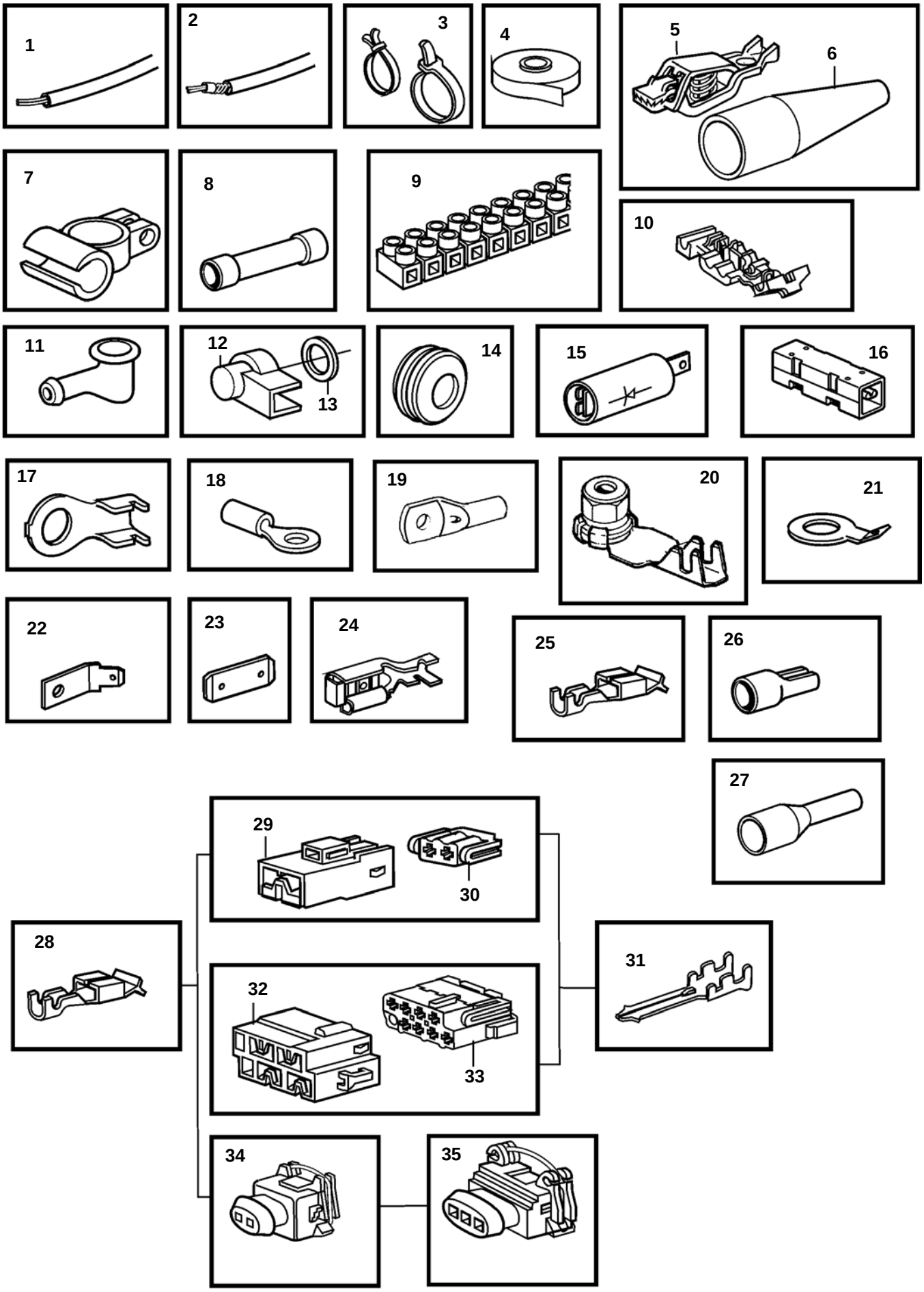

D3-110I-A, D3-110I-B, D3-110I-C, D3-130A-A, D3-130I-A, D3-130A-B, D3-130I-B, D3-130A-C, D3-130I-C, D3-160A-A, D3-160I-A, D3-160A-B, D3-160I-B, D3-160A-C, D3-160I-C, D3-190A-B, D3-190I-B, D3-190A-C, D3-190I-C

REF	PART NO.	DESCRIPTION	NOTES
1	970624	Cable, type RK	1,5sq.mm, BLACK
	970626	Cable, type RK	1,5sq.mm, RED
	970661	Cable, type R2	1,5sq.mm, RED
	970663	Cable, type R2	2,5sq.mm, BLACK
	970698	Cable, type R2	2,5sq.mm, RED
	970700	Cable, type RK	4,0sq.mm, BLACK
	970709	Cable, type RK	6,0sq.mm, BLACK
	970711	Cable, type R2	6,0sq.mm, RED
	954485	Cable, type RK	16,0sq.mm, RED
	954500	Cable, type RK	25,0sq.mm, RED
	954502	Cable, type RK	35,0sq.mm, RED
2	874854	Cable	2x1,5sq.mm, Non reinforced ship cable approved by classification societies.
	863657	Cable	4,0sq.mm, RED, Reinforced ship cable approved by classification societies.
	874855	Cable	2x2,5sq.mm, Non reinforced ship cable approved by classification societies.
	842092	Cable	Non reinforced ship cable approved by classification societies., 3x1,5sq.mm
	874858	Cable	6,0sq.mm, BLACK, Non reinforced ship cable approved by classification societies.
		Cable	Non reinforced ship cable approved by classification societies., 16,0sq.mm, RED
	874861	Cable	Non reinforced ship cable approved by classification societies., 25,0sq.mm, RED
	874862	Cable	35,0sq.mm, RED, Non reinforced ship cable approved by classification societies.
	846639	Cable	Non reinforced ship cable approved by classification societies., 2x1,5sq.mm
	874870	Cable	Non reinforced ship cable approved by classification societies., 2x1,5sq.mm
	846346	Cable	2x2,5sq.mm, Replaced by cable harness 872679 and adapter 872939.
	874346	Cable	RFOU 0,6/1kv, Reinforced ship cable approved by classification societies.
3	948211	Strip clamp	3x1,5sq.mm
	949666	Strip clamp, with mount. hole	3x4,0sq.mm
	948616	Strip clamp	3x6,0sq.mm
	862832	Strip clamp, steel	4x1,5sq.mm
4	858283	Electrical tape	4x2,5sq.mm
5	844280	Cable terminal, battery cable +pole	16x1,5sq.mm
6		Isolator	RED
		Isolator	BLACK
7	954505	Cable terminal, battery cable -pole	D=77mm L=280mm
	954506	Cable terminal, battery cable +pole	D=42mm L=170mm
8	956956	Splice	D=102mm L=362mm
	956958	Splice	1,5-2,5sq.mm, BLUE
	956960	Splice	L=61mm
9	926219	Coupling piece	BLACK
10	944306	Clamp	BLUE
11	829200	Protective cap	0,5-1,0sq.mm, RED
12	1234326	Protective cap	1,5-2,5sq.mm, BLUE
13	960140	Washer	3-6sq.mm, YELLOW
14	941269	Cable grommet	MAX 20sq.mm, 12-POLE
	821053	Rubber bushing	I.D=35mm
	943920	Protecting plug	I.D=40mm
15	20382270	Diode	
16	20382270	Diode	
17	970788	Cable terminal	M5x1,1-2,5sq.mm
	970789	Cable terminal	M6x1,1-2,5sq.mm
	970791	Cable terminal	M10x1,1-2,5sq.mm
18	881492	Cable terminal	M4x1,1-2,5sq.mm
	881493	Cable terminal	M5x1,1-2,5sq.mm
	881508	Cable terminal	M6x1,1-2,5sq.mm
	881494	Cable terminal	M8x1,1-2,5sq.mm
	881504	Cable terminal	M10x1,1-2,5sq.mm
	881506	Cable terminal	M4x2,6-6,0sq.mm
	881495	Cable terminal	M5x2,6-6,0sq.mm
	881496	Cable terminal	M6x2,6-6,0sq.mm
	881497	Cable terminal	M8x2,6-6,0sq.mm
	881498	Cable terminal	M10x2,6-6,0sq.mm
	940331	Cable terminal	M5x6,1-10,0sq.mm
	940332	Cable terminal	M6x6,1-10,0sq.mm
	940333	Cable terminal	M8x6,1-10,0sq.mm
		Cable terminal	M10x6,1-10,0sq.mm
	881512	Cable terminal	M5x10,1-16,0sq.mm
	940335	Cable terminal	M6x10,1-16,0sq.mm
	940336	Cable terminal	M8x10,1-16,0sq.mm
	940337	Cable terminal	M10x10,1-16,0sq.mm

D3-110I-A, D3-110I-B, D3-110I-C, D3-130A-A, D3-130I-A, D3-130A-B, D3-130I-B, D3-130A-C, D3-130I-C, D3-160A-A, D3-160I-A, D3-160A-B, D3-160I-B, D3-160A-C, D3-160I-C, D3-190A-B, D3-190I-B, D3-190A-C, D3-190I-C

REF	PART NO.	DESCRIPTION	NOTES
19	949587	Cable terminal	M10x10mm2
20	8140576	Nut	M4
21	865758	Cable terminal	I.D=12,5 D=23mm
22	944485	Spade terminal	6,3xM5x180
23	839328	Spade terminal	16,3x6,3x0,8
24	881491	Cable terminal	6,3x0,75-2,1sq.mm
25	853015	Cable terminal	FOR 853866, YASAKI, For trim instrument.
26	942429	Cable terminal	FOR 853866, YASAKI
27	3829867	Cable terminal	
	3829868	Cable terminal	
28	970777	Cable terminal	
29	968377	Housing	2,8x2 NATURAL
	968379	Housing	2,8x2 GRAY
30	968376	Housing	4,8/2,8x2 NATURAL
	968378	Housing	4,8/2,8x2 GRAY
31	974313	Cable terminal	2,8x0,8x1,1-2,5sq.mm
32	968401	Housing	2,8x8 NATURAL
33	968400	Housing	4,8/2,8x8 NATURAL
34	976256	Switch	2-POLE
35	967713	Housing	3-POLE

D3-110I-A, D3-110I-B, D3-110I-C, D3-130A-A, D3-130I-A, D3-130A-B, D3-130I-B, D3-130A-C, D3-130I-C, D3-160A-A, D3-160I-A, D3-160A-B, D3-160I-B, D3-160A-C, D3-160I-C, D3-190A-B, D3-190I-B, D3-190A-C, D3-190I-C

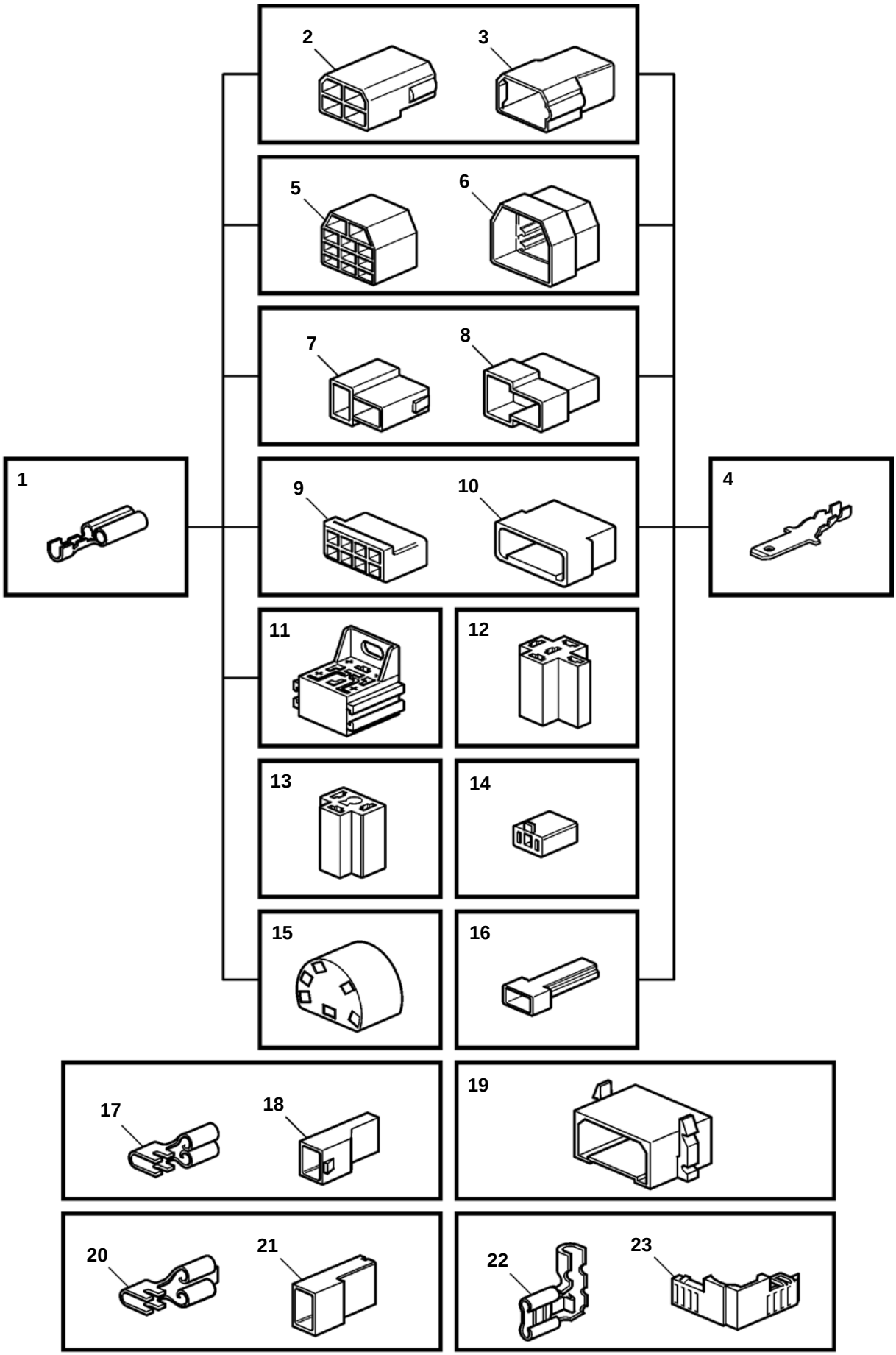

D3-110I-A, D3-110I-B, D3-110I-C, D3-130A-A, D3-130I-A, D3-130A-B, D3-130I-B, D3-130A-C, D3-130I-C, D3-160A-A, D3-160I-A, D3-160A-B, D3-160I-B, D3-160A-C, D3-160I-C, D3-190A-B, D3-190I-B, D3-190A-C, D3-190I-C

REF	PART NO.	DESCRIPTION	NOTES
1	973150	Cable terminal	6,3x0,8x1,1-2,5sq.mm
	949206	Cable terminal	6,3x0,8x4,0-6,0sq.mm
2	948856	Receptacle housing	6,3x4 NATURAL
3	948855	Tab housing	6,3x4 NATURAL
4	973117	Cable terminal	6,3x0,8x0,5-1,0mm2
	881487	Cable terminal	6,3x0,8x0,75-2,5sq.mm
	881488	Cable terminal	6,3x0,8x4,0-6,0sq.mm
5	945830	Receptacle housing	6,3x11 NATURAL
6	945831	Tab housing	6,3x11 NATURAL
7	958210	Receptacle housing	6,3x2 BLACK
8	958209	Tab housing	6,3x2 BLACK
9	944076	Receptacle housing	6,3x8 NATURAL
10	948857	Tab housing	6,3x8 NATURAL
11	977184	Tab housing	6,3x5x4,8/2,8x4
12	1214948	Receptacle housing	6,3x5 BLACK
13	945469	Receptacle housing	6,3x3 BLACK
14	1578937	Receptacle housing	6,3x2 NATURAL
15	828624	Receptacle housing	6,3x6
16	958207	Tab housing	6,3x1 BLACK
17	949405	Cable terminal	4,8x1,1-2,5sq.mm
18	947848	Receptacle housing	4,8x1 NATURAL
19	944077	Housing	6,3x8 NATURAL
20	881483	Cable terminal	6,3x0,8x1,1-2,5sq.mm
	881484	Cable terminal	6,3x0,8x4,0-6,0sq.mm
21	949597	Housing	6,3x1 NATURAL
	943511	Receptacle housing	6,3x1 NATURAL
22	881489	Cable terminal	6,3x0,8x1,1-2,5
23	944221	Receptacle housing	6,3x1 NATURAL

D3-110I-A, D3-110I-B, D3-110I-C, D3-130A-A, D3-130I-A, D3-130A-B, D3-130I-B, D3-130A-C, D3-130I-C, D3-160A-A, D3-160I-A, D3-160A-B, D3-160I-B, D3-160A-C, D3-160I-C, D3-190A-B, D3-190I-B, D3-190A-C, D3-190I-C

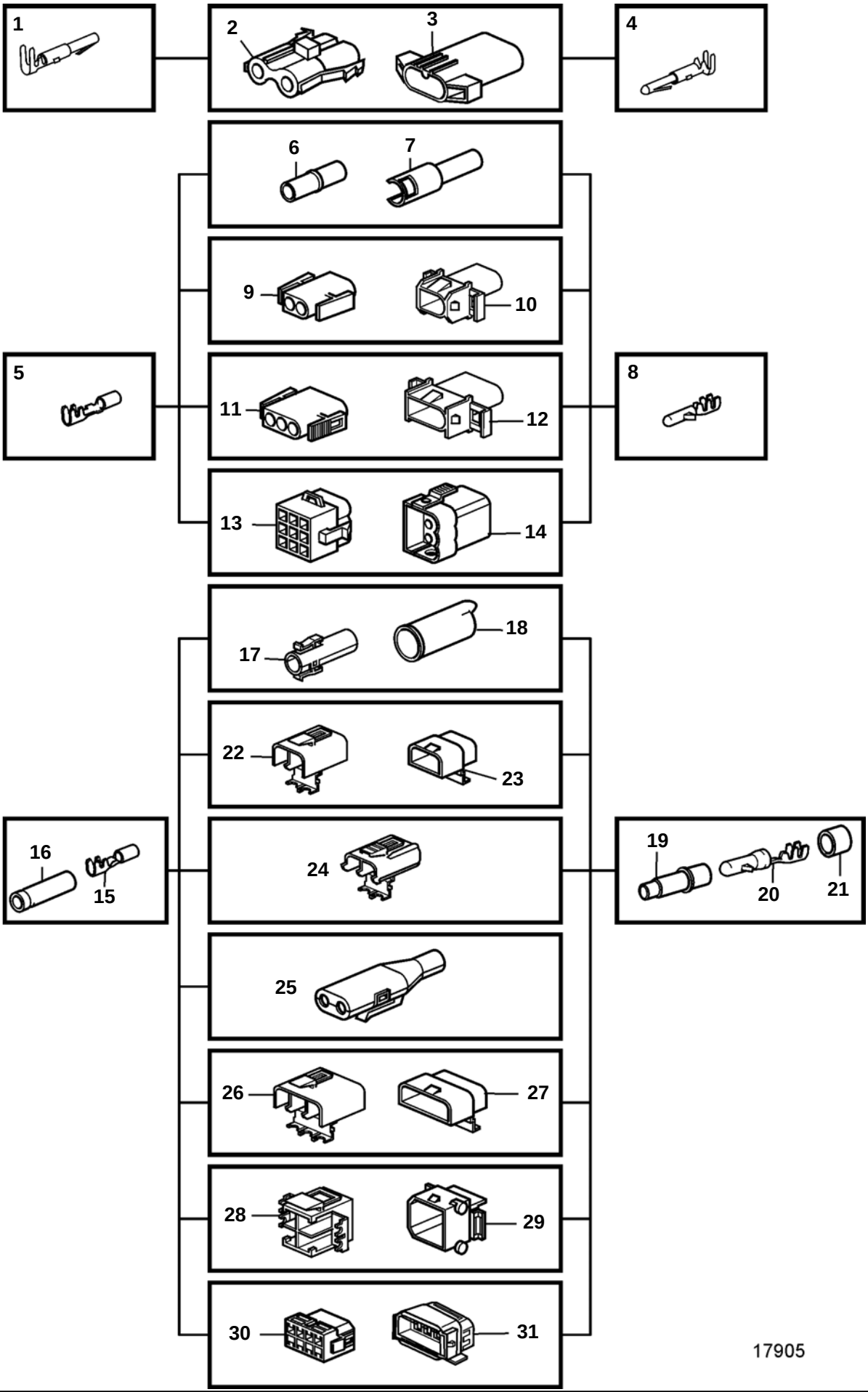

D3-110I-A, D3-110I-B, D3-110I-C, D3-130A-A, D3-130I-A, D3-130A-B, D3-130I-B, D3-130A-C, D3-130I-C, D3-160A-A, D3-160I-A, D3-160A-B, D3-160I-B, D3-160A-C, D3-160I-C, D3-190A-B, D3-190I-B, D3-190A-C, D3-190I-C

REF	PART NO.	DESCRIPTION	NOTES
1	946038	Cable terminal	2,1x0,5-1mm2
2	944224	Receptacle housing	2-POLE
3	944223	Receptacle housing	2-POLE
4		Cable terminal	Not marketed by Volvo Penta., 2,1x0,5-1mm2
5	965822	Cable terminal	3,5x1,1-2,5sq.mm
	948289	Cable terminal	3,5x2,5-4,0sq.mm
6	949584	Insulator	3,5x1 NATURAL
7	949583	Insulator	3,5x1 NATURAL
8	969831	Cable terminal	3,5x0,5-1mm2
	965824	Cable terminal	3,5x1,1-2,5sq.mm
	965825	Cable terminal	3,5x2,6-4,0sq.mm
9	948996	Receptacle housing	3,5x2 NATURAL
10	948995	Tab housing	3,5x2 NATURAL
11	948296	Housing	3,5x3 NATURAL
12	948297	Insulator	3,5x3 NATURAL
13	948294	Receptacle housing	3,5x9 NATURAL
14	948295	Tab housing	3,5x9 NATURAL
15	949371	Cable terminal	3,5x0,75-1,5mm2
		Cable terminal	3,5x2,5-4,5sq.mm
16	1598753	Isolator	
17	1307035	Insulator	1-POLE
18	1308436	Insulator	1-POLE
19	1608765	Isolator	
20	965824	Cable terminal	3,5x2,5-4,5sq.mm
21	1608766	Seal	
22	1307048	Receptacle housing	2-POLE
23	1307049	Tab housing	2-POLE
24	970753	Receptacle housing	2-POLE
25	1624477	Switch	2-POLE
26	1259828	Housing	3-POLE
27	3523442	Housing	3-POLIG (1259829)
28	1259830	Receptacle housing	4-POLE
29	1259831	Housing	4-POLE
30	966812	Receptacle housing	8-POLE
31	967809	Pin housing	8-POLE

D3-110I-A, D3-110I-B, D3-110I-C, D3-130A-A, D3-130I-A, D3-130A-B, D3-130I-B, D3-130A-C, D3-130I-C, D3-160A-A, D3-160I-A, D3-160A-B, D3-160I-B, D3-160A-C, D3-160I-C, D3-190A-B, D3-190I-B, D3-190A-C, D3-190I-C

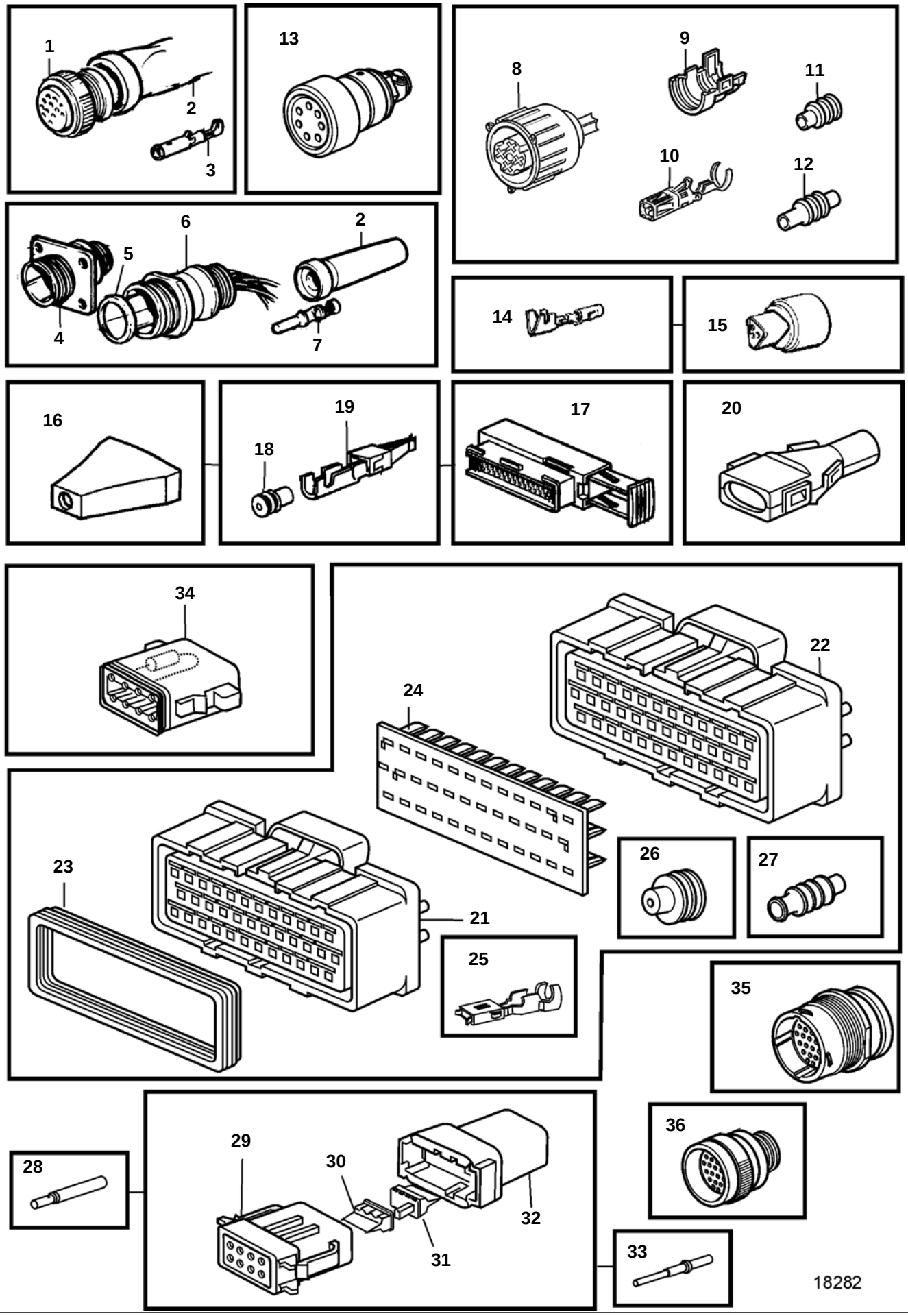

D3-110I-A, D3-110I-B, D3-110I-C, D3-130A-A, D3-130I-A, D3-130A-B, D3-130I-B, D3-130A-C, D3-130I-C, D3-160A-A, D3-160I-A, D3-160A-B, D3-160I-B, D3-160A-C, D3-160I-C, D3-190A-B, D3-190I-B, D3-190A-C, D3-190I-C

REF	PART NO.	DESCRIPTION	NOTES
1	846612	Sleeve connector	16-POLE
2	847005	Sealing collar	L=100mm D=20mm
3	849959	Cable terminal	
4	846611	Sleeve connector	16-POLE
5	846615	Sealing ring	
6	846647	Pin connector	16-POLE
7	849958	Cable terminal	1,6x0,5-1,5sq.mm
8	8159013	Tab housing	4-POLE
9		Adapter	
10	8155901	Cable terminal	
11	8155900	Seal	
12	8155899	Sealing plug	
13	1618737	Switch	7-POLE
14	853521	Cable terminal	
15	853498	Receptacle housing	3-POLE
16	873632	Rubber guard	
17	9148263	Switch	42-POLE
18	970772	Seal	1,2-2,1sq.mm BLUE
	9148107	Seal	1,4-2,0 GREY
	970773	Seal	2,2-3sq.mm WHITE
19	9148135	Switch	1,6x0,5-1sq.mm
	970778	Cable terminal	4,8/2,8x0,5-1sq.mm
	970779	Cable terminal	4,8/2,8x1,1-2,5sq.mm
20	8142100	Adapter	
21	977532	Receptacle housing	24-POLE BLACK
22	977897	Receptacle housing	24-POLIG RED
23		• Seal	
24	977533	Receptacle housing	
25	977539	Cable terminal	
26	1079234	Seal	BROWN
27	977540	Plug	GREY
28	874146	Sleeve	
29	874142	Receptacle housing	8-POLE
30	874144	Key	ORANGE
31	874145	Key	ORANGE
32	874143	Tab housing	8-POLE
33	874147	Pin	
34	874271	Resistor, end terminator	
35	874112	Connector unit	From control panel to engine. 23-pole.
36	874092	Connector unit	From engine to control panel. 23-pole.

D3-110I-A, D3-110I-B, D3-110I-C, D3-130I-A, D3-130I-B, D3-130I-C, D3-160I-A, D3-160I-B, D3-160I-C, D3-190I-B, D3-190I-C

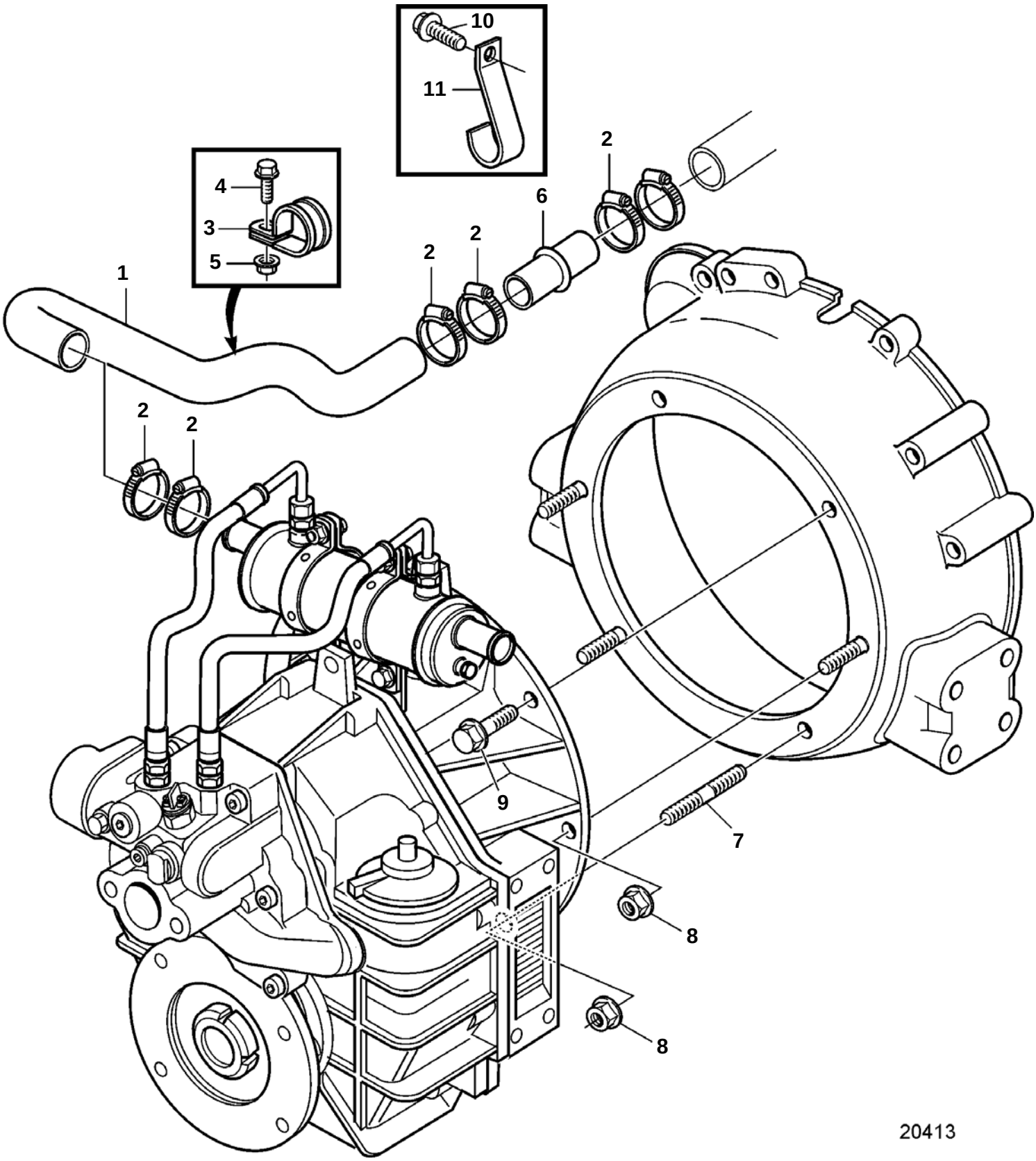

D3-110I-A, D3-110I-B, D3-110I-C, D3-130I-A, D3-130I-B, D3-130I-C, D3-160I-A, D3-160I-B, D3-160I-C, D3-190I-B, D3-190I-C

REF	PART NO.	QTY	DESCRIPTION	NOTES
1	3807634	1	Hose	
2	961669	6	Hose clamp	
3	967645	1	Clamp	Mount on engine suspension.
4	947542	1	Screw	Mount on engine suspension.
5	945407	1	Flange nut	Mount on engine suspension.
6	861090	1	Tube	
7	953067	4	Stud	
8	971095	4	Nut	
9	946472	2	Screw	
10	3580798	1	Clamp	
11	944926	1	Flange screw	

D3-110I-A, D3-110I-B, D3-110I-C, D3-130I-A, D3-130I-B, D3-130I-C, D3-160I-A, D3-160I-B, D3-160I-C, D3-190I-B, D3-190I-C

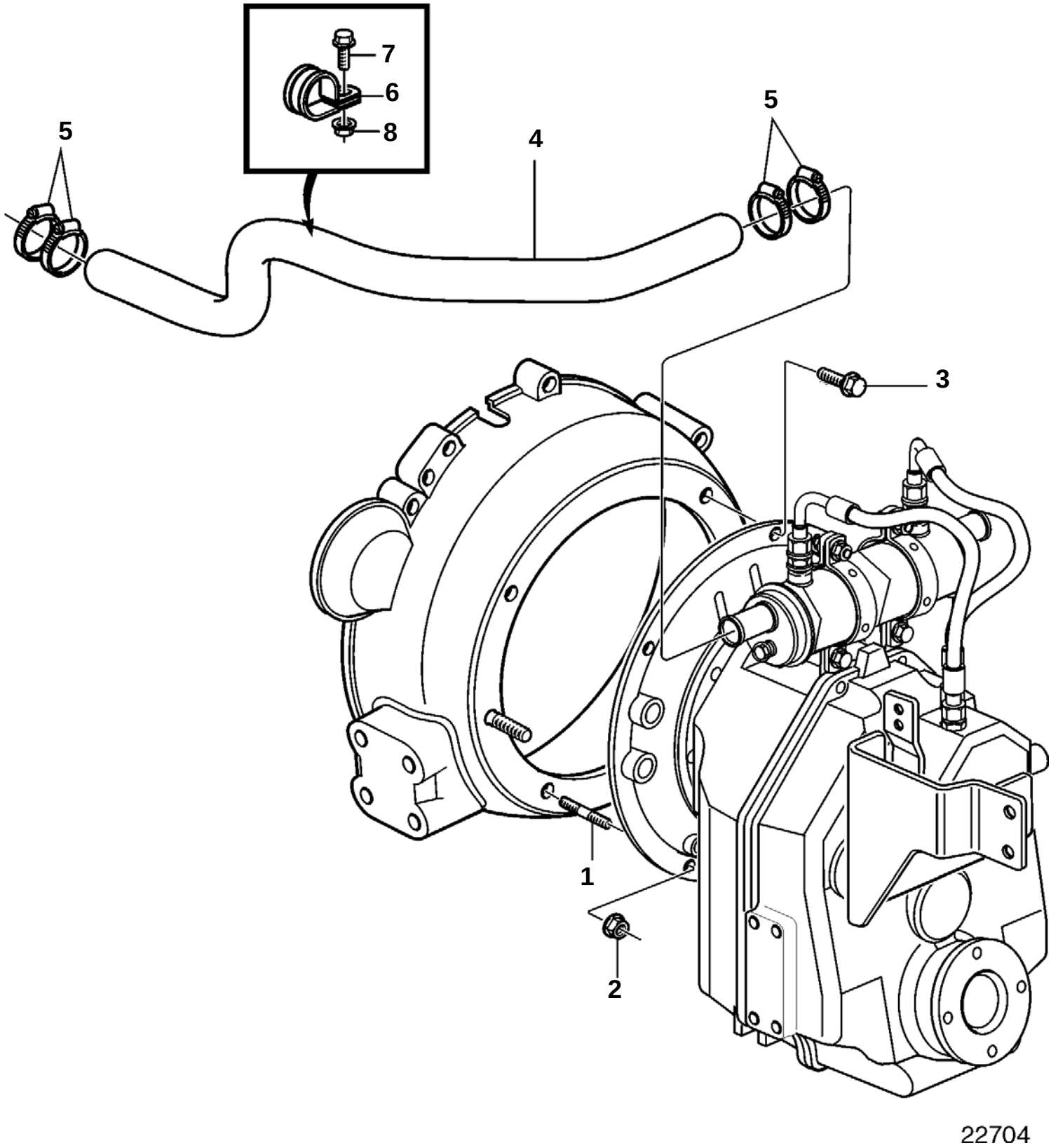

D3-110I-A, D3-110I-B, D3-110I-C, D3-130I-A, D3-130I-B, D3-130I-C, D3-160I-A, D3-160I-B, D3-160I-C, D3-190I-B, D3-190I-C

REF	PART NO.	QTY	DESCRIPTION
1	953067	4	Stud
2	971095	4	Nut
3	946472	2	Screw
4	3817420	1	Hose
5	961669	4	Hose clamp
6	967645	1	Clamp
7	947542	1	Screw
8	945407	1	Flange nut

Power Steering Pump Adapter

D3-110I-A, D3-110I-B, D3-110I-C, D3-130A-A, D3-130I-A, D3-130A-B, D3-130I-B, D3-130A-C, D3-130I-C, D3-160A-A, D3-160I-A, D3-160A-B, D3-160I-B, D3-160A-C, D3-160I-C, D3-190A-B, D3-190I-B, D3-190A-C, D3-190I-C

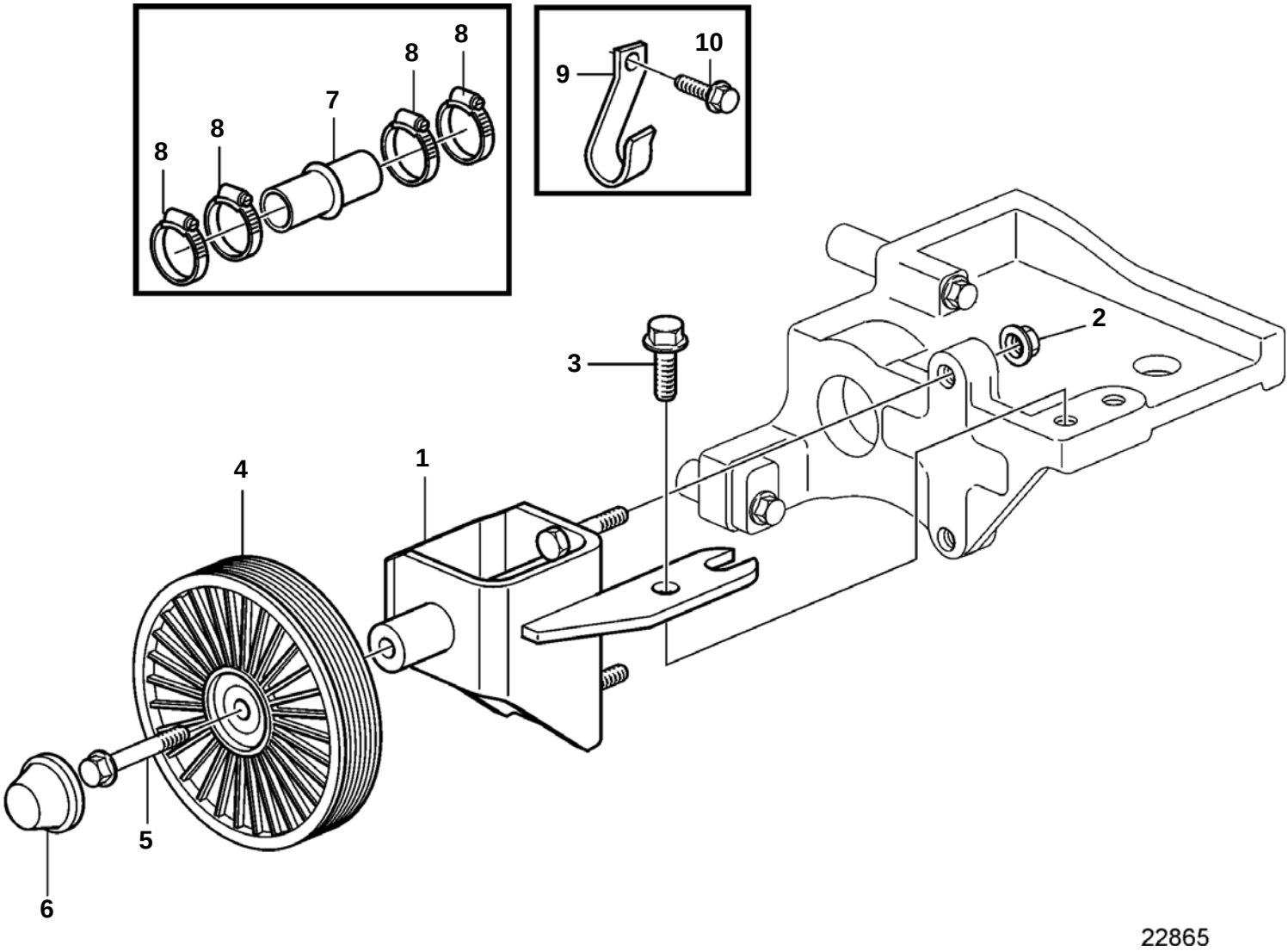

D3-110I-A, D3-110I-B, D3-110I-C, D3-130A-A, D3-130I-A, D3-130A-B, D3-130I-B, D3-130A-C, D3-130I-C, D3-160A-A, D3-160I-A, D3-160A-B, D3-160I-B, D3-160A-C, D3-160I-C, D3-190A-B, D3-190I-B, D3-190A-C, D3-190I-C

REF	PART NO.	QTY	DESCRIPTION	NOTES
1	3887324	1	Adapter	
2	945408	2	Flange nut	
3	945444	1	Flange screw	M8x25mm
4	9458470	1	Pulley	
5	965186	1	Flange screw	M10x50mm
6	9125572	1	Cover	
7	861090	1	Tube	
8	961669	4	Hose clamp	
9	3580798	1	Clamp	
10	944926	1	Flange screw	

D3-130A-A, D3-130A-B, D3-130A-C, D3-160A-A, D3-160A-B, D3-160A-C, D3-190A-B, D3-190A-C

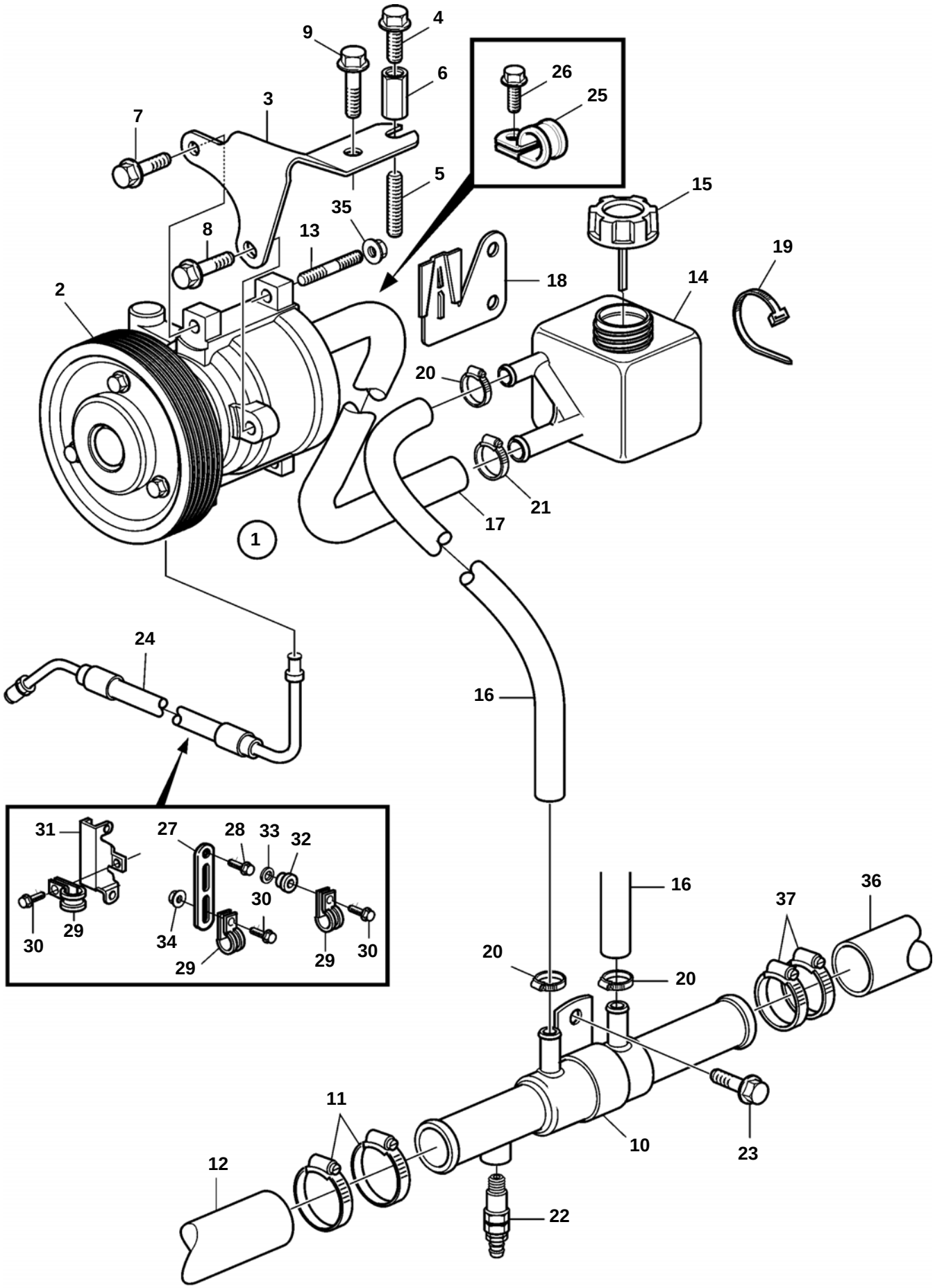

D3-130A-A, D3-130A-B, D3-130A-C, D3-160A-A, D3-160A-B, D3-160A-C, D3-190A-B, D3-190A-C

REF	PART NO.	QTY	DESCRIPTION	NOTES
1	1359649	1	Power steering pump	
2	3583030	1	Pulley	
3	3584471	1	Bracket	
4	947107	1	Flange screw	For Groud Cable
5	953045	1	Stud	For Groud Cable
6	855314	1	Nut	For Groud Cable
7	946440	1	Flange screw	
8	946440	1	Flange screw	
9	945444	1	Flange screw	
10	3808545	1	Oil cooler	
11	961670	2	Hose clamp	
12	3584356	1	Hose	
13	953047	2	Stud	
14	6819752	1	Reservoir	
15	1359625	1	· Cover	
16	872217	2	Hose	
17	941995	1	Rubber hose	L=1,5m
18	856768	1	Bracket	
19	948211	1	Strip clamp	
20	961664	3	Hose clamp	
21	943472	2	Hose clamp	
22	949918	1	Drain cock	
23	946440	1	Flange screw	
24	3588362	1	Hose, steering cylinder	
25	952635	1	Clamp	
26	946544	1	Flange screw	
27	965541	1	Bracket	
28	981177	1	Flange screw	
29	952631	3	Clamp	
30	967949	3	Screw	
31	3587913	1	Protecting plate	
32	3588129	1	Plug	
33	11998	1	Gasket	
34	945407	1	Flange nut	
35	945408	2	Flange nut	
36	3584445	1	Hose	
37	961669	2	Hose clamp	

D3-110I-A, D3-110I-B, D3-110I-C, D3-130A-A, D3-130I-A, D3-130A-B, D3-130I-B, D3-130A-C, D3-130I-C, D3-160A-A, D3-160I-A, D3-160A-B, D3-160I-B, D3-160A-C, D3-160I-C, D3-190A-B, D3-190I-B, D3-190A-C, D3-190I-C

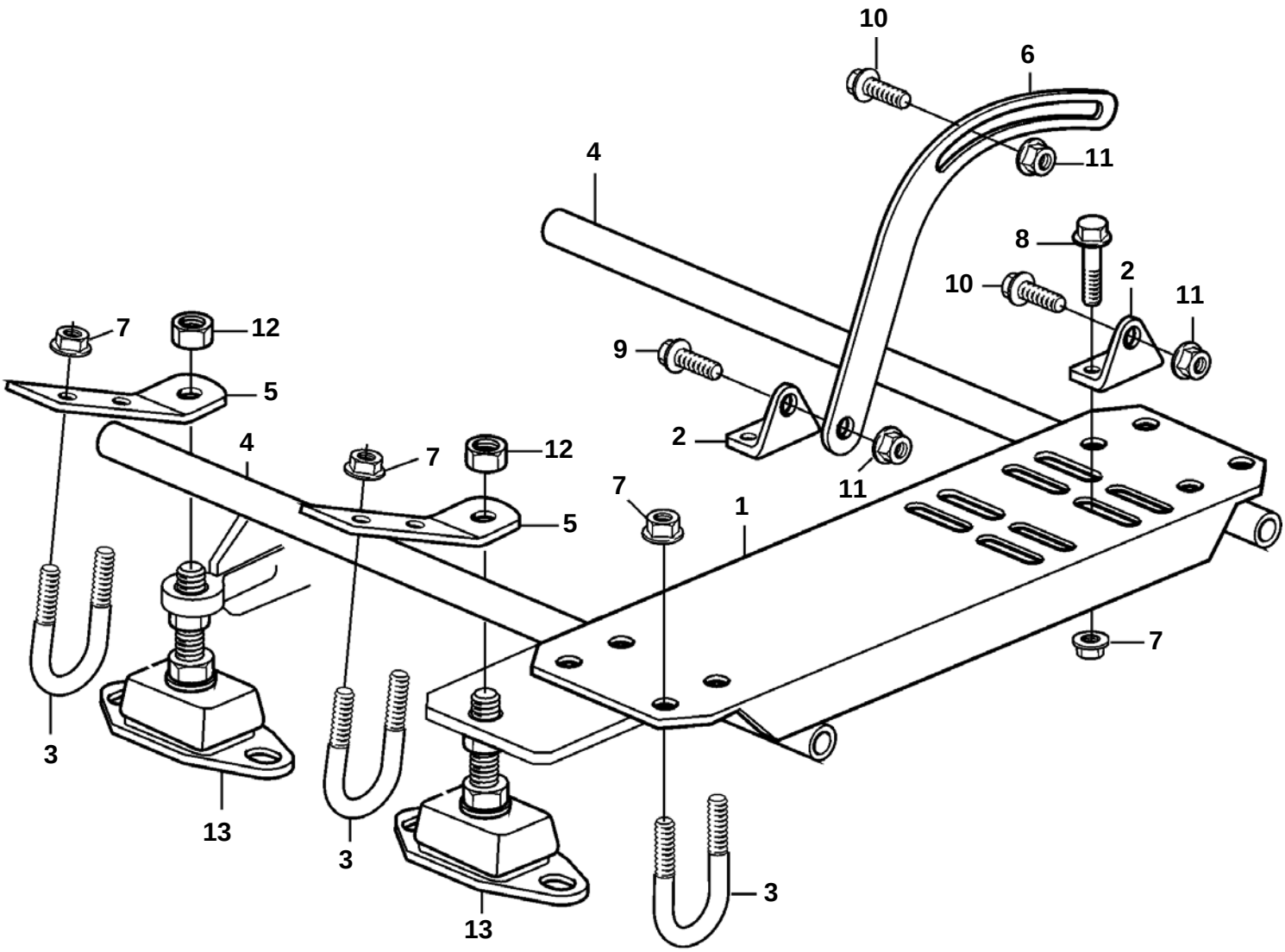

18973

D3-110I-A, D3-110I-B, D3-110I-C, D3-130A-A, D3-130I-A, D3-130A-B, D3-130I-B, D3-130A-C, D3-130I-C, D3-160A-A, D3-160I-A, D3-160A-B, D3-160I-B, D3-160A-C, D3-160I-C, D3-190A-B, D3-190I-B, D3-190A-C, D3-190I-C

REF	PART NO.	QTY	DESCRIPTION
1	3809859	1	Bracket
2	3583848	4	Anchorage
3	3580739	8	Clamp
4	3583506	2	Tube
5	3809860	4	Bracket
6	854608	2	Tensioner
7	945408	16	Flange nut
8	945444	8	Flange screw
9	946329	2	Flange screw
10	946472	4	Screw
11	971095	2	Nut
12		2	Nut
13		2	Rubber cushion

D3-110I-A, D3-110I-B, D3-110I-C, D3-130A-A, D3-130I-A, D3-130A-B, D3-130I-B, D3-130A-C, D3-130I-C, D3-160A-A, D3-160I-A, D3-160A-B, D3-160I-B, D3-160A-C, D3-160I-C, D3-190A-B, D3-190I-B, D3-190A-C, D3-190I-C

REF	PART NO.	QTY	DESCRIPTION	SEE SEC.	NOTES
1	3588915	1	Overhaul kit, water pump		
		1	· Impeller		
	3583809	1	· O-ring		
	827247	1	· Sealing ring		
	3584349	1	· Sealing ring		
	3584352	4	· Screw		
	3584353	1	· Cover		
	3842786	1	Impeller kit		
	3583809	1	· O-ring		
		1	· Impeller		
	3858938	1	· O-ring		
	3862178	1	· Grease		
	3883844	1	Gasket kit, turbo		
	8631549	1	· Gasket		
	420641	1	· Gasket		
	18665	2	· Gasket		
	1275549	1	· Gasket		
	3883845	1	De-carbonizing kit		
	8631652	20	· Valve seal		
	8692438	1	· Gasket		
	8642665	1	· Gasket		
	8631561	1	· Sealing ring		
	30729340	1	· Gasket		(8631562)
	11994	2	· Gasket		
	3883844	1	· Gasket kit, turbo		
	3808069	1	Electrical distribut		Use kit for upgrading old Electrical box (3588607) to new variant (3807556).
	3807556	1	· Housing		
	3807834	2	· Cover		
	3807843	1	· Bracket		
	3807844	1	· Bracket		
	3807365	1	· Cable kit		
	968476	16	· Flange screw		
	949666	1	· Strip clamp		
	3841043	1	On board kit		
	3842786	1	· Impeller kit		
	3843948	1	· Puller		
			· Bulletin P-08-2-1	P-08-2-1-EN	Impeller Removal Tool
1	3584352	4	· Screw		
	30731809	1	· Drive belt		
	961669	2	· Hose clamp		
	961671	2	· Hose clamp		
	943470	2	· Hose clamp		
	943471	2	· Hose clamp		
	948211	10	· Strip clamp		
	978999	2	· Fuse		
	969011	2	· Gasket		
	858283	1	· Electrical tape		
	858284	1	· Box		
	858631	1	· Bag		

DESCRIPTION	SEE SEC.	NOTES
Cylinder Head	6336	D3-110I-A, D3-130A-A, D3-130I-A, D3-160A-A, D3-160I-A
Cylinder Head	9298	D3-110I-B, D3-110I-C, D3-130A-B, D3-130I-B, D3-130A-C, D3-130I-C, D3-160A-B, D3-160I-B, D3-160A-C, D3-160I-C, D3-190A-B, D3-190I-B, D3-190A-C, D3-190I-C
Cylinder Block	6338	D3-110I-A, D3-130A-A, D3-130I-A, D3-160A-A, D3-160I-A
Cylinder Block	9531	D3-110I-B, D3-110I-C, D3-130A-B, D3-130I-B, D3-130A-C, D3-130I-C, D3-160A-B, D3-160I-B, D3-160A-C, D3-160I-C, D3-190A-B, D3-190I-B, D3-190A-C, D3-190I-C
Flywheel Housing	7169	D3-110I-A, D3-110I-B, D3-110I-C, D3-130I-A, D3-130I-B, D3-130I-C, D3-160I-A, D3-160I-B, D3-160I-C, D3-190I-B, D3-190I-C
Flywheel Housing	6375	D3-130A-A, D3-130A-B, D3-130A-C, D3-160A-A, D3-160A-B, D3-160A-C, D3-190A-B, D3-190A-C
Timing Gear Housing	6341	D3-110I-A, D3-130A-A, D3-130I-A, D3-160A-A, D3-160I-A
Timing Gear Housing	9523	D3-110I-B, D3-110I-C, D3-130A-B, D3-130I-B, D3-130A-C, D3-130I-C, D3-160A-B, D3-160I-B, D3-160A-C, D3-160I-C, D3-190A-B, D3-190I-B, D3-190A-C, D3-190I-C
Camshaft	6337	D3-110I-A, D3-130A-A, D3-130I-A, D3-160A-A, D3-160I-A
Camshaft	9541	D3-110I-B, D3-110I-C, D3-130A-B, D3-130I-B, D3-130A-C, D3-130I-C, D3-160A-B, D3-160I-B, D3-160A-C, D3-160I-C, D3-190A-B, D3-190I-B, D3-190A-C, D3-190I-C
Crank Mechanism	7132	D3-110I-A, D3-130I-A, D3-160I-A
Crank Mechanism	9545	D3-110I-B, D3-130I-B, D3-160I-B, D3-190I-B
Crank Mechanism	21495	D3-110I-C, D3-130I-C, D3-160I-C, D3-190I-C
Crank Mechanism	21422	D3-130A-A, D3-160A-A
Crank Mechanism	6340	D3-130A-A, D3-160A-A
Crank Mechanism	9624	D3-130A-B, D3-130A-C, D3-160A-B, D3-160A-C, D3-190A-B, D3-190A-C
Motor Mounts, Front	6636	D3-110I-A, D3-110I-B, D3-110I-C, D3-130A-A, D3-130I-A, D3-130A-B, D3-130I-B, D3-130A-C, D3-130I-C, D3-160A-A, D3-160I-A, D3-160A-B, D3-160I-B, D3-160A-C, D3-160I-C, D3-190A-B, D3-190I-B, D3-190A-C, D3-190I-C
Engine Mounts for Reverse Gear HS25A-A and HS45A-A	7170	D3-110I-A, D3-110I-B, D3-110I-C, D3-130I-A, D3-130I-B, D3-130I-C, D3-160I-A, D3-160I-B, D3-160I-C, D3-190I-B, D3-190I-C
Engine Mounts for Reverse Gear HS63VE	9331	D3-110I-A, D3-110I-B, D3-110I-C, D3-130I-A, D3-130I-B, D3-130I-C, D3-160I-A, D3-160I-B, D3-160I-C, D3-190I-B, D3-190I-C
Engine Mounting	6316	D3-110I-A, D3-130A-A, D3-130I-A, D3-160A-A, D3-160I-A
Engine Mounting	9655	D3-110I-B, D3-110I-C, D3-130A-B, D3-130I-B, D3-130A-C, D3-130I-C, D3-160A-B, D3-160I-B, D3-160A-C, D3-160I-C, D3-190A-B, D3-190I-B, D3-190A-C, D3-190I-C
Engine Suspension for SX-Drive	6627	D3-130A-A, D3-130A-B, D3-130A-C, D3-160A-A, D3-160A-B, D3-160A-C, D3-190A-B, D3-190A-C
Engine Cover	6615	D3-110I-A, D3-110I-B, D3-110I-C, D3-130A-A, D3-130I-A, D3-130A-B, D3-130I-B, D3-130A-C, D3-130I-C, D3-160A-A, D3-160I-A, D3-160A-B, D3-160I-B, D3-160A-C, D3-160I-C, D3-190A-B, D3-190I-B, D3-190A-C, D3-190I-C

DESCRIPTION	SEE SEC.	NOTES
Lubricating System	6342	D3-110I-A, D3-130A-A, D3-130I-A, D3-160A-A, D3-160I-A
Lubricating System	9514	D3-110I-B, D3-110I-C, D3-130A-B, D3-130I-B, D3-130A-C, D3-130I-C, D3-160A-B, D3-160I-B, D3-160A-C, D3-160I-C, D3-190A-B, D3-190I-B, D3-190A-C, D3-190I-C
Oil Filter	6343	D3-110I-A, D3-130A-A, D3-130I-A, D3-160A-A, D3-160I-A
Oil Filter	9395	D3-110I-B, D3-110I-C, D3-130A-B, D3-130I-B, D3-130A-C, D3-130I-C, D3-160A-B, D3-160I-B, D3-160A-C, D3-160I-C, D3-190A-B, D3-190I-B, D3-190A-C, D3-190I-C

DESCRIPTION	SEE SEC.	NOTES
Fuel System	6324	D3-110I-A, D3-130A-A, D3-130I-A, D3-160A-A, D3-160I-A
Fuel System	9383	D3-110I-B, D3-110I-C, D3-130A-B, D3-130I-B, D3-130A-C, D3-130I-C, D3-160A-B, D3-160I-B, D3-160A-C, D3-160I-C, D3-190A-B, D3-190I-B, D3-190A-C, D3-190I-C
Fuel Injector and Delivery Pipe	6350	D3-110I-A, D3-130A-A, D3-130I-A, D3-160A-A, D3-160I-A
Fuel Injector and Delivery Pipe	9583	D3-110I-B, D3-110I-C, D3-130A-B, D3-130I-B, D3-130A-C, D3-130I-C, D3-160A-B, D3-160I-B, D3-160A-C, D3-160I-C, D3-190A-B, D3-190I-B, D3-190A-C, D3-190I-C
Fuel Injection Pump	6605	D3-110I-A, D3-130A-A, D3-130I-A, D3-160A-A, D3-160I-A
Fuel Injection Pump	9552	D3-110I-B, D3-110I-C, D3-130A-B, D3-130I-B, D3-130A-C, D3-130I-C, D3-160A-B, D3-160I-B, D3-160A-C, D3-160I-C, D3-190A-B, D3-190I-B, D3-190A-C, D3-190I-C
Fuel Filter and Water Separator	6700	D3-110I-A, D3-110I-B, D3-110I-C, D3-130A-A, D3-130I-A, D3-130A-B, D3-130I-B, D3-130A-C, D3-130I-C, D3-160A-A, D3-160I-A, D3-160A-B, D3-160I-B, D3-160A-C, D3-160I-C, D3-190A-B, D3-190I-B, D3-190A-C, D3-190I-C
Fuel Filter and Water Separator	9044	D3-110I-A, D3-110I-B, D3-110I-C, D3-130A-A, D3-130I-A, D3-130A-B, D3-130I-B, D3-130A-C, D3-130I-C, D3-160A-A, D3-160I-A, D3-160A-B, D3-160I-B, D3-160A-C, D3-160I-C, D3-190A-B, D3-190I-B, D3-190A-C, D3-190I-C
Fuel Filter and Water Separator, RINA-approved	9025	D3-110I-A, D3-110I-B, D3-110I-C, D3-130A-A, D3-130I-A, D3-130A-B, D3-130I-B, D3-130A-C, D3-130I-C, D3-160A-A, D3-160I-A, D3-160A-B, D3-160I-B, D3-160A-C, D3-160I-C, D3-190A-B, D3-190I-B, D3-190A-C, D3-190I-C
Fuel Filter and Water Separator	9024	D3-110I-A, D3-110I-B, D3-110I-C, D3-130A-A, D3-130I-A, D3-130A-B, D3-130I-B, D3-130A-C, D3-130I-C, D3-160A-A, D3-160I-A, D3-160A-B, D3-160I-B, D3-160A-C, D3-160I-C, D3-190A-B, D3-190I-B, D3-190A-C, D3-190I-C

DESCRIPTION	SEE SEC.	NOTES
Regulator, VNT	6345	D3-110I-A, D3-110I-B, D3-110I-C, D3-130A-A, D3-130I-A, D3-130A-B, D3-130I-B, D3-130A-C, D3-130I-C, D3-160A-A, D3-160I-A, D3-160A-B, D3-160I-B, D3-160A-C, D3-160I-C, D3-190A-B, D3-190I-B, D3-190A-C, D3-190I-C
Exhaust Manifold and Turbocharger	6323	D3-110I-A, D3-130A-A, D3-130I-A, D3-160A-A, D3-160I-A
Exhaust Manifold and Turbocharger	9405	D3-110I-B, D3-110I-C, D3-130A-B, D3-130I-B, D3-130A-C, D3-130I-C, D3-160A-B, D3-160I-B, D3-160A-C, D3-160I-C, D3-190A-B, D3-190I-B, D3-190A-C, D3-190I-C
Exhaust Line and Air Filter	6610	D3-130A-A, D3-160A-A
Exhaust Line and Air Filter	9374	D3-130A-B, D3-160A-B
Exhaust Line and Air Filter	21548	D3-130A-C, D3-160A-C
Exhaust Line and Air Filter	9376	D3-190A-B
Exhaust Line and Air Filter	21549	D3-190A-C
Exhaust Line and Air Filter	7183	D3-110I-A, D3-130I-A, D3-160I-A
Exhaust Line and Air Filter	9373	D3-110I-B, D3-110I-C, D3-130I-B, D3-130I-C, D3-160I-B, D3-160I-C
Exhaust Line and Air Filter	9375	D3-190I-B, D3-190I-C
Air Filter with Installation Components	9370	D3-110I-B, D3-110I-C, D3-130A-B, D3-130I-B, D3-130A-C, D3-130I-C, D3-160A-B, D3-160I-B, D3-160A-C, D3-160I-C, D3-190A-B, D3-190I-B, D3-190A-C, D3-190I-C

DESCRIPTION	SEE SEC.	NOTES
Oil Cooler	6344	D3-110I-A, D3-130A-A, D3-130I-A, D3-160A-A, D3-160I-A
Oil Cooler	9379	D3-110I-B, D3-130A-B, D3-130I-B, D3-160A-B, D3-160I-B, D3-190A-B, D3-190I-B
Oil Cooler	21539	D3-110I-C, D3-130A-C, D3-130I-C, D3-160A-C, D3-160I-C, D3-190A-C, D3-190I-C
Heat Exchanger With Installation Parts	6721	D3-110I-A, D3-130A-A, D3-160A-A, D3-160I-A
Heat Exchanger With Installation Parts	9388	D3-110I-B, D3-110I-C, D3-130A-B, D3-130I-B, D3-130A-C, D3-130I-C, D3-160A-B, D3-160I-B, D3-160A-C, D3-160I-C
Heat Exchanger With Installation Parts	9389	D3-190A-B, D3-190I-B, D3-190A-C, D3-190I-C
Heat Exchanger, Components	6823	D3-110I-A, D3-130A-A, D3-130I-A, D3-160A-A, D3-160I-A
Heat Exchanger, Components	9371	D3-110I-B, D3-110I-C, D3-130A-B, D3-130I-B, D3-130A-C, D3-130I-C, D3-160A-B, D3-160I-B, D3-160A-C, D3-160I-C
Heat Exchanger, Components	9372	D3-190A-B, D3-190I-B, D3-190A-C, D3-190I-C
Thermostat Housing and Water pump assy	6354	D3-110I-A, D3-130A-A, D3-130I-A, D3-160A-A, D3-160I-A
Thermostat Housing and Water pump assy	9558	D3-110I-B, D3-110I-C, D3-130A-B, D3-130I-B, D3-130A-C, D3-130I-C, D3-160A-B, D3-160I-B, D3-160A-C, D3-160I-C, D3-190A-B, D3-190I-B, D3-190A-C, D3-190I-C
Aftercooler	6722	D3-110I-A, D3-130A-A, D3-130I-A, D3-160A-A, D3-160I-A
Aftercooler	9364	D3-110I-B, D3-110I-C, D3-130A-B, D3-130I-B, D3-130A-C, D3-130I-C, D3-160A-B, D3-160I-B, D3-160A-C, D3-160I-C
Aftercooler	9630	D3-190A-B, D3-190I-B, D3-190A-C, D3-190I-C
After Cooler, Components	6824	D3-110I-A, D3-130A-A, D3-130I-A, D3-160A-A, D3-160I-A
After Cooler, Components	9363	D3-110I-B, D3-110I-C, D3-130A-B, D3-130I-B, D3-130A-C, D3-130I-C, D3-160A-B, D3-160I-B, D3-160A-C, D3-160I-C
After Cooler, Components	9629	D3-190A-B, D3-190I-B, D3-190A-C, D3-190I-C
Sea Water Pump	6608	D3-110I-A, D3-130A-A, D3-130I-A, D3-160A-A, D3-160I-A
Sea Water Pump	9398	D3-110I-B, D3-130I-B
Sea Water Pump	9399	D3-110I-C, D3-130I-C, D3-160I-B, D3-160I-C, D3-190I-B, D3-190I-C
Sea Water Pump	9400	D3-130A-B
Sea Water Pump	9401	D3-130A-C, D3-160A-B, D3-160A-C, D3-190A-B, D3-190A-C
Expansion Tank	6623	D3-110I-A, D3-130A-A, D3-130I-A, D3-160A-A, D3-160I-A
Expansion Tank	9333	D3-110I-B, D3-110I-C, D3-130A-B, D3-130I-B, D3-130A-C, D3-130I-C, D3-160A-B, D3-160I-B, D3-160A-C, D3-160I-C, D3-190A-B, D3-190I-B, D3-190A-C, D3-190I-C
Hot Water Outlet	6748	D3-110I-A, D3-130A-A, D3-130I-A, D3-160A-A, D3-160I-A
Hot Water Outlet	21482	D3-110I-B, D3-110I-C, D3-130A-B, D3-130I-B, D3-130A-C, D3-130I-C, D3-160A-B, D3-160I-B, D3-160A-C, D3-160I-C, D3-190A-B, D3-190I-B, D3-190A-C, D3-190I-C
Water Intake	6825	D3-110I-A, D3-110I-B, D3-110I-C, D3-130I-A, D3-130I-B, D3-130I-C, D3-160I-A, D3-160I-B, D3-160I-C, D3-190I-B, D3-190I-C

DESCRIPTION	SEE SEC.	NOTES
Alternator	6335	D3-110I-A, D3-130A-A, D3-130I-A, D3-160A-A, D3-160I-A
Alternator	9397	D3-110I-B, D3-130A-B, D3-130I-B
Alternator	9513	D3-110I-C, D3-130A-C, D3-130I-C, D3-160A-B, D3-160I-B, D3-160A-C, D3-160I-C, D3-190A-B, D3-190I-B, D3-190A-C, D3-190I-C
Mounting kit, extra generator	9320	D3-110I-A, D3-110I-B, D3-110I-C, D3-130A-A, D3-130I-A, D3-130A-B, D3-130I-B, D3-130A-C, D3-130I-C, D3-160A-A, D3-160I-A, D3-160A-B, D3-160I-B, D3-160A-C, D3-160I-C, D3-190A-B, D3-190I-B, D3-190A-C, D3-190I-C
Starter Motor	6611	D3-110I-A, D3-110I-B, D3-110I-C, D3-130A-A, D3-130I-A, D3-130A-B, D3-130I-B, D3-130A-C, D3-130I-C, D3-160A-A, D3-160I-A, D3-160A-B, D3-160I-B, D3-160A-C, D3-160I-C, D3-190A-B, D3-190I-B, D3-190A-C, D3-190I-C
Electrical System	6771	D3-110I-A, D3-130A-A, D3-130I-A, D3-160A-A, D3-160I-A
Electrical System	9548	D3-110I-B, D3-110I-C, D3-130A-B, D3-130I-B, D3-130A-C, D3-130I-C, D3-160A-B, D3-160I-B, D3-160A-C, D3-160I-C, D3-190A-B, D3-190I-B, D3-190A-C, D3-190I-C
Electrical Box	6741	D3-110I-A, D3-110I-B, D3-110I-C, D3-130A-A, D3-130I-A, D3-130A-B, D3-130I-B, D3-130A-C, D3-130I-C, D3-160A-A, D3-160I-A, D3-160A-B, D3-160I-B, D3-160A-C, D3-160I-C, D3-190A-B, D3-190I-B, D3-190A-C, D3-190I-C
Electrical box, dual station	21586	D3-110I-A, D3-110I-B, D3-110I-C, D3-130A-A, D3-130I-A, D3-130A-B, D3-130I-B, D3-130A-C, D3-130I-C, D3-160A-A, D3-160I-A, D3-160A-B, D3-160I-B, D3-160A-C, D3-160I-C, D3-190A-B, D3-190I-B, D3-190A-C, D3-190I-C
Instrument Panel, EVC	9625	D3-110I-A, D3-110I-B, D3-110I-C, D3-130A-A, D3-130I-A, D3-130A-B, D3-130I-B, D3-130A-C, D3-130I-C, D3-160A-A, D3-160I-A, D3-160A-B, D3-160I-B, D3-160A-C, D3-160I-C, D3-190A-B, D3-190I-B, D3-190A-C, D3-190I-C
Electrical Materials, Instrument EVC-A	6639	D3-110I-A, D3-110I-B, D3-130A-A, D3-130I-A, D3-130A-B, D3-130I-B, D3-160A-A, D3-160I-A, D3-160A-B, D3-160I-B, D3-190A-B, D3-190I-B
Electrical Materials, Instrument EVC-B	21550	D3-110I-A, D3-110I-B, D3-130A-A, D3-130I-A, D3-130A-B, D3-130I-B, D3-160A-A, D3-160I-A, D3-160A-B, D3-160I-B, D3-190A-B, D3-190I-B
Electrical Materials, Instrument EVC-C	21603	D3-110I-C, D3-130A-C, D3-130I-C, D3-160A-C, D3-160I-C, D3-190A-C, D3-190I-C
Control Unit and Cables, EVC-A	6645	D3-110I-A, D3-130A-A, D3-130I-A, D3-160A-A, D3-160I-A
Control Unit and Cables, EVC-B	9604	D3-110I-B, D3-130A-B, D3-130I-B, D3-160A-B, D3-160I-B, D3-190A-B, D3-190I-B
Control Unit and Cables, EVC-C	21584	D3-110I-C, D3-130A-C, D3-130I-C, D3-160A-C, D3-160I-C, D3-190A-C, D3-190I-C
Monitoring Panel, EVC-A	6393	D3-110I-A, D3-130A-A, D3-130I-A, D3-160A-A, D3-160I-A
Monitoring Panel, EVC-B	9605	D3-110I-B, D3-130A-B, D3-130I-B, D3-160A-B, D3-160I-B, D3-190A-B, D3-190I-B
Monitoring Panel, EVC-C	21622	D3-110I-C, D3-130A-C, D3-130I-C, D3-160A-C, D3-160I-C, D3-190A-C, D3-190I-C
Electrical Materials	1963	D3-110I-A, D3-110I-B, D3-110I-C, D3-130A-A, D3-130I-A, D3-130A-B, D3-130I-B, D3-130A-C, D3-130I-C, D3-160A-A, D3-160I-A, D3-160A-B, D3-160I-B, D3-160A-C, D3-160I-C, D3-190A-B, D3-190I-B, D3-190A-C, D3-190I-C
Electrical Materials	1964	D3-110I-A, D3-110I-B, D3-110I-C, D3-130A-A, D3-130I-A, D3-130A-B, D3-130I-B, D3-130A-C, D3-130I-C, D3-160A-A, D3-160I-A, D3-160A-B, D3-160I-B, D3-160A-C, D3-160I-C, D3-190A-B, D3-190I-B, D3-190A-C, D3-190I-C
Electrical Materials	1965	D3-110I-A, D3-110I-B, D3-110I-C, D3-130A-A, D3-130I-A, D3-130A-B, D3-130I-B, D3-130A-C, D3-130I-C, D3-160A-A, D3-160I-A, D3-160A-B, D3-160I-B, D3-160A-C, D3-160I-C, D3-190A-B, D3-190I-B, D3-190A-C, D3-190I-C
Electrical Materials	4415	D3-110I-A, D3-110I-B, D3-110I-C, D3-130A-A, D3-130I-A, D3-130A-B, D3-130I-B, D3-130A-C, D3-130I-C, D3-160A-A, D3-160I-A, D3-160A-B, D3-160I-B, D3-160A-C, D3-160I-C, D3-190A-B, D3-190I-B, D3-190A-C, D3-190I-C

DESCRIPTION	SEE SEC.	NOTES
Connecting Components for HS25A-A and HS45A-A	7168	D3-110I-A, D3-110I-B, D3-110I-C, D3-130I-A, D3-130I-B, D3-130I-C, D3-160I-A, D3-160I-B, D3-160I-C, D3-190I-B, D3-190I-C
Connecting Components for HS63VE	9330	D3-110I-A, D3-110I-B, D3-110I-C, D3-130I-A, D3-130I-B, D3-130I-C, D3-160I-A, D3-160I-B, D3-160I-C, D3-190I-B, D3-190I-C

DESCRIPTION	SEE SEC.	NOTES
Power Steering Pump Adapter	7173	D3-110I-A, D3-110I-B, D3-110I-C, D3-130A-A, D3-130I-A, D3-130A-B, D3-130I-B, D3-130A-C, D3-130I-C, D3-160A-A, D3-160I-A, D3-160A-B, D3-160I-B, D3-160A-C, D3-160I-C, D3-190A-B, D3-190I-B, D3-190A-C, D3-190I-C
Servo Pump and cooler for stern drives	6607	D3-130A-A, D3-130A-B, D3-130A-C, D3-160A-A, D3-160A-B, D3-160A-C, D3-190A-B, D3-190A-C

DESCRIPTION	SEE SEC.	NOTES
General Bracket	9546	D3-110I-A, D3-110I-B, D3-110I-C, D3-130A-A, D3-130I-A, D3-130A-B, D3-130I-B, D3-130A-C, D3-130I-C, D3-160A-A, D3-160I-A, D3-160A-B, D3-160I-B, D3-160A-C, D3-160I-C, D3-190A-B, D3-190I-B, D3-190A-C, D3-190I-C

DESCRIPTION	SEE SEC.	NOTES
Repair Kits	7263	D3-110I-A, D3-110I-B, D3-110I-C, D3-130A-A, D3-130I-A, D3-130A-B, D3-130I-B, D3-130A-C, D3-130I-C, D3-160A-A, D3-160I-A, D3-160A-B, D3-160I-B, D3-160A-C, D3-160I-C, D3-190A-B, D3-190I-B, D3-190A-C, D3-190I-C

REF	DESCRIPTION	SEE SEC.
21	Engine	21
22	Lubricating System	22
23	Fuel System	23
25	Intake and Exhaust System	25
26	Cooling System	26
30	Electrical System	30
44	Transmissions	44
64	Steering System	64
90	Miscellaneous Equipment	90
99	Repair Kits	99